This product utilizes **R-32** *refrigerant*

MRCOOL® PTAC

INSTALLATION & OWNER'S MANUAL

MODELS:

PTACI*335DW



Manual should be read thoroughly before installation and retained for future use.

Due to updates and continually improving performance, the information and instructions within this manual are subject to change without notice.

Version Date: October 23, 2026
Please visit www.mrcool.com/documentation
to ensure you have the latest version of this manual.

MRCOOL®
COMFORT MADE SIMPLE

CONTENTS

1 SAFETY 1
2 UNIT OVERVIEW 10
2.1 Packing List 10
3 UNIT INSTALLATION 11
3.1 Installation Overview 11
3.2 Installation Location 12
3.3 Installation 13
4 CONTROLS 15
4.1 DIP Switch Configuration 15
4.2 DIP Switch Configuration by Panel Control 17
4.3 Wall Thermostat Terminal 19
4.4 Operation 21
4.5 Accessories 24
4.6 App Setup & Operation 25
5 POST-INSTALLATION 29
5.1 Care & Maintenance 29
5.2 Troubleshooting 31

Safety Precautions

Read Before Using

Incorrect usage may cause serious damage or injury.

The symbols below are used throughout this manual to indicate instructions that should be followed closely or actions that should be avoided to prevent death, injury, and/or property damage.

WARNING — Indicates the possibility of personal injury or loss of life.

CAUTION — Indicates the possibility of property damage or serious consequences.

Symbols Displayed on the Unit		
	**WARNING**	This symbol shows that this appliance uses a flammable refrigerant. If the refrigerant is leaked and exposed to an external ignition source, there is a risk of fire.
	**CAUTION**	This symbol shows that the installation manual should be read carefully.
	**CAUTION**	This symbol shows that service personnel should be handling this equipment in reference to the installation manual.
	**CAUTION**	This symbol shows that information is available in the installation & owner's manual.

CAUTION

- This appliance can be used by children ages 8 and above and persons with reduced physical, sensory, or mental capabilities or those who lack of experience and knowledge if they are supervised or given instruction concerning the use of the appliance in a way that is safe, fully understanding the hazards that are involved. Children should not play with the appliance. Cleaning and user maintenance should not be completed by children without supervision. (Applicable to European countries)
- Children should be supervised to ensure that they do not play with the appliance.
- If the supply cord is damaged, it must be replaced by MRCOOL®, a service agent, or similarly qualified persons in order to avoid a hazard.
- The appliance should be installed in accordance with local and national wiring regulations.
- Do not operate your air conditioner in a wet room, such as a bathroom or laundry room.
- The appliance should be located at least 3.28 ft (1 m) away from combustible materials.

WARNING FOR CLEANING & MAINTENANCE

- State of California Proposition 65 Warning (US Only). This product contains chemicals known to the State of California to cause cancer, birth defects, or other reproductive harm.
- Plug in the power plug properly. Otherwise, it may cause electric shock or fire due to excess heat generation.
- Do not operate or stop the unit by inserting or pulling out the power plug. It may cause electric shock or fire due to heat generation.
- Do not damage or use an unspecified power cord. It may cause electric shock or fire.
- Always install a circuit breaker and a dedicated power circuit. Incorrect installation may cause fire and electric shock. Do not operate with wet hands or in a damp environment. It may cause electric shock. Do not direct airflow at room occupants only. This could damage your health.
- Always ensure effective grounding. Incorrect grounding may cause electric shock.
- Do not allow water to run into electric parts. It may cause failure of the machine or electric shock.
- Do not modify the power cord length or share the outlet with other appliances. It may cause electric shock or fire due to heat generation.
- Unplug the unit if strange sounds, smells, or smoke come from it. It may cause fire and electric shock.
- Do not use the socket if it is loose or damaged. It may cause fire and electric shock.
- Do not open the unit during operation. It may cause electric shock.
- Keep firearms away. It may cause fire. Do not use the power cord close to heating appliances. It may cause fire and electric shock. Do not use the power cord near flammable gas or combustibles, such as gasoline, benzene, thinner, etc. It may cause an explosion or fire.
- Ventilate the room before operating the air conditioner if there is a gas leak from another appliance. It may cause explosion, fire and, burns. Do not disassemble or modify the unit. It may cause failure and electric shock.

! CAUTION

- When the air filter is to be removed, do not touch the metal parts of the unit. It may cause an injury.
- Ventilate the room well when used in conjunction with a stove or other appliances, as an oxygen shortage may occur.
- Do not use strong detergents such as wax or thinner to clean, as they can cause discoloration or superficial scratches. Instead, use a soft cloth to clean the unit.
- Do not clean with water. Water may enter the unit and degrade the insulation or cause an electric shock.
- Do not use for any purpose besides heating and cooling. Do not use unit to preserve precision devices, food, pets, plants, or art objects as it may increase the likelihood of quality decline, etc.
- Discontinue device operation and close the window during a storm or hurricane. Operation while windows are open may allow rainwater to enter your residence and ruin floors, furniture, etc.
- When the unit needs to be cleaned, switch it off and turn off the circuit breaker.
- Do not clean the unit when power is on as it may cause fire, electric shock, or injury.
- Insert filters securely and clean them every 3 months. Failure may occur if the unit operates without filters.
- Hold the plug by its head when removing it or it may cause electric shock and damage the unit.
- Disconnect power when the unit is not in use for a long period of time. Otherwise, it may cause product failure or fire.
- Do not place obstacles around air inlets or inside air outlets, as this may cause appliance failure or an accident. Do not place a heavy object on the power cord so the cord is not compressed. If the cord is compressed, there is danger of fire or electric shock.
- Don't drink water drained from the air conditioner. It contains contaminants and could make you sick.
- Use caution when unpacking and installing the unit. Sharp edges could cause injury.
- If water enters the unit, disconnect the unit from the power outlet and switch off the circuit breaker. From there, contact a qualified service technician.
- Contact an authorized service technician for the repair or maintenance of this unit.
- Contact a licensed contractor to install this unit.

NOTE

This air conditioner is designed to be operated under the following conditions:

Cooling Operation	Outdoor Temp.	32°F~122°F/0°C~50°C
	Indoor Temp.	61°F~90°F/16°C~32°C
Heating Operation	Outdoor Temp.	23°F~75°F/-5°C~24°C
	Indoor Temp.	32°F~81°F/0°C~27°C

Performance may decrease outside of these operating temperatures.

Operation of Current Device

The power supply cord contains a current device that senses damage to the power cord. To test your power supply cord, do the following:

- Plug in the air conditioner.
- The power supply cord will have two buttons on the plug head. Press the TEST button, and you will hear a click as the RESET button pops out.
- Press the RESET button again, and you will hear a click as the button engages.
- The power supply cord is now supplying electricity to the unit. (This is also indicated by a light on the plug head in some products).

Receptacles/ Sub-Bases						
Power Supply	230/208V 15 Amp	230/208V 20 Amp	230/208V 30 Amp	265V 15 Amp	265V 20 Amp	265V 30 Amp

The shape may be different according to its model.

CAUTION

1. Do not pour water into the air outlet.
2. When restarting the heating mode after powering the unit off, wait from 30 seconds to 3 minutes for the four-way valve to reset and compressor protection to engage.
3. If the self-cleaning function is activated, the unit will complete the self-cleaning cycle before shutting down.
4. When paired with a fresh air system, note that the fresh air intake may affect indoor temperature and energy consumption. In auto mode, the unit will regulate the fresh air system according to the logic employed by preset controls.
5. For non-internal drainage installations, ensure a 3-degree outward tilt during installation.
6. If a high-heat unit is equipped with a water pump, clean the pump every three months. A slight water-pumping sound may occur when condensate levels are low.
7. Electric heating mode defaults to high or turbo airflow setting.
8. The airflow grille can be rotated 180° for installation, requiring removal of the limiter posts on the grille in such cases.
9. A mild odor may occur during the first 10 minutes of initial use, after prolonged inactivity, or when activating the electric heating. Be sure the area is well-ventilated during these scenarios.
10. Do not put obstacles around the air inlet or inside the air outlet, like a curtain, etc.
11. Do not allow liquid to run into the air inlet or air outlet.
12. There are moving and hot parts inside this unit. Do not operate the unit with the front panel and rear grille removed.
13. The evaporator must be cleaned once every 3 months by professionals.

ELECTRICAL WARNINGS

The complete electrical rating of your new PTHP air conditioner is stated on the serial plate. Refer to the rating when checking the electrical requirements.

- Be sure the air conditioner is properly grounded. To minimize shock and fire hazards, proper grounding is important. The power cord is equipped with a three-prong grounding plug for protection against shock hazards.
- Your equipment must be used in conjunction with a properly-grounded wall receptacle. If the wall receptacle you intend to use is not adequately grounded or protected by a time delay fuse or circuit breaker, have a qualified electrician install the proper receptacle. Ensure the receptacle is accessible after the unit installation.
- Do not run the equipment without a side protective cover in place. This could result in mechanical damage within the air conditioner.
- Do not use an extension cord or adapter plug.

For Your Safety:

- Do not store or use gasoline or other flammable vapors and liquids in the vicinity of this or any other appliance.
- Avoid fire hazard or electric shock. Do not use an extension cord or adapter plug. Do not remove any prongs from the power cord.

How To Prevent Accidents:

To reduce the risk of fire, electrical shock, or injury to persons when using your air conditioner, follow basic precautions, including the following:

- Be sure the electrical service is adequate for the model you have chosen. This information can be found on the serial plate, which is located on the side of the cabinet and behind the grille.
- Be sure the air conditioner has been securely and correctly installed according to the installation instructions in this manual. Save this manual for the future removal or installation this unit.
- When handling the air conditioner, be careful to avoid cuts from sharp metal fins on the front and rear coils.

NOTE

- The power supply cord with this air conditioner contains a current detection device designed to reduce the risk of fire. If the power cord is damaged, it cannot be repaired – it must be replaced with a cord from MRCOOL®.
- Do not use this device to turn the unit on or off.
- Always make sure the RESET button is pushed in for correct operation.
- The power supply cord must be replaced if it fails to reset when either the TEST button is pushed or if it cannot be reset. A new one can be obtained from MRCOOL®.
- If the power supply cord is damaged, it cannot be repaired. It MUST be replaced by one obtained from MRCOOL®.
- When 265V units are to be installed, the power supply must be permanent wiring. Permanent wiring may be done through the accessory sub-base. An exposed cord connection on 265V units is not permitted.

Grounding-Type Wall Receptacle

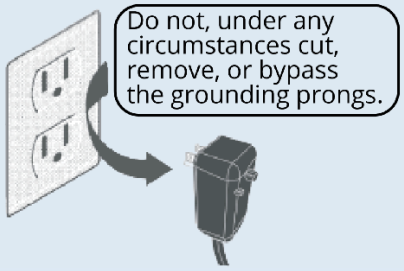

Power supply cord with 3-prong grounding plug and current detection device.

ELECTRICAL WARNINGS

Electrical Requirements
Electrical grounding is required on this appliance, as electrical shock and personal injury may occur.
DO NOT ground to a gas line if cold water pipe is interrupted by plastic, non-metallic gaskets, or other insulating materials.
DO NOT use for grounding.
Check with a qualified electrician if you are in doubt as to whether the appliance is properly grounded.
DO NOT modify the power supply cord plug.
If it does not fit the outlet, have a proper outlet installed by a qualified electrician.
DO NOT have a fuse in the neutral or grounding circuit.
A fuse in the neutral or grounding circuit could result in an electrical shock.
DO NOT use an extension cord with this appliance.
Failure to follow these instructions could result in electrical shock, serious injury, or death.
Observe all local governing codes and ordinances. Do not, under any circumstances, remove the power supply cord grounding prong.
NOTE: If codes permit, and a separate grounding wire is used, it is recommended that a qualified electrician determine that the grounding path is adequate and not interrupted by plastic, non-metallic gaskets, or other insulating materials.
Receptacle wiring
Receptacle wiring should be a minimum of 14-gauge. Use copper wire only. It is your responsibility to provide proper and adequate receptacle wiring installed by a qualified electrician.
Electrical requirements
- A time delay fuse or time delay circuit breaker is also required.
- A separate circuit, serving only this appliance, MUST be provided.

NOTE: For details about the parameters of the electric heating function, see the nameplate on the unit.

FLAMMABILITY REFRIGERANT WARNING

- Servicing shall only be performed as recommended by MRCOOL®. Maintenance and repair requiring the assistance of other skilled personnel should be carried out under the supervision of the person trained to use flammable refrigerants.
- DO NOT modify the length of the power cord or use an extension cord to power the unit.
- DO NOT share a single outlet with other electrical appliances. Improper power supply can cause fire or electrical shock.
- Please follow the instructions carefully to handle, install, clear, and service the appliance to avoid damage or hazard.

Flammability

- R-32 is used within the appliance.
- When maintaining or disposing of the appliance, the refrigerant (R-32) should be recovered properly and shouldn't be discharged directly into the air.
- Compliance with local and national gas regulations should be observed.
- Keep ventilation openings clear of any obstructions.
- The appliance should be stored to prevent mechanical damage from occurring.
- The appliance should be stored in a well-ventilated area where the room size corresponds to the room area as specified for operation.
- Any person who is involved with working on or breaking into a refrigerant circuit should hold a current, valid certificate from an industry-accredited assessment authority, which authorizes their competence to handle refrigerants safely in accordance with an industry-recognized assessment specification. All training should follow the ANNEX HH requirements of UL 60335-2-40 4th Edition.
- Examples for such working procedures are:
  - Breaking into the refrigerating circuit;
  - Opening of sealed components;
  - Opening of ventilated enclosures.
- No open fire or device-like switch which may generate spark/arcing should be around the appliance to avoid the ignition of the flammable refrigerant used. Please follow the instructions carefully when storing or maintaining the appliance to prevent mechanical damage from occurring.
- Do not use means to accelerate the defrosting process or to clean, other than those recommended by MRCOOL®.
- The appliance should be stored in a room without continuously operating open flames (for example: open flames, an operating gas appliance, etc.) and ignition sources (for example: an operating electric heater, etc.) close to the appliance.
- Do not pierce or burn.
- Be aware that the refrigerants may not contain an odor.
- No method other than that recommended by MRCOOL® should be used to accelerate the defrosting process or for cleaning.
- Appliance should be installed, operated and stored in a room with a floor area according to the amount of refrigerant to be charged. For specific information on the type of gas and the amount, please refer to the relevant label on the unit.
- Appliances should be installed, operated, and stored in a room with a floor area larger than 4 m^2.

1. **Transport of equipment containing flammable refrigerants**
   - See transport regulations.
2. **Marking of equipment using signs**
   - See local regulations.
3. **Disposal of equipment using flammable refrigerants**
   - See national regulations.
4. **Storage of equipment/appliances**
   - The storage of the appliance should be in accordance with the applicable regulations or instructions, whichever is more stringent.
5. **Storage of packed (unsold) equipment**

Storage package protection should be constructed such that mechanical damage to the equipment inside the package will not cause a leak of the refrigerant charge. The maximum number of pieces of equipment permitted to be stored together will be determined by local regulations.

FLAMMABLE REFRIGERANT WARNINGS

6. Information on servicing

- Checks to the area

Prior to beginning work on systems containing flammable refrigerants, safety checks are necessary to ensure the risk of ignition is minimized. For repair to the refrigeration system, the following precautions should be complied with before working on the system.

- Work procedure

Work should be completed using a controlled procedure to minimize the risk of a flammable gas or vapor being present while the work is being performed.

- General work area

All maintenance staff and others working in the local area should be instructed on the nature of the work being done. Working in confined spaces should be avoided. The area around the workspace should be sectioned off. Ensure the conditions within the area have been made safe by controlling the flammable material.

- Checking for the presence of refrigerant

The area should be checked with an appropriate refrigerant detector prior to and during work to ensure the technician is aware of potentially flammable atmospheres. Make sure the leak detection equipment being used is suitable for use with flammable refrigerants, i.e., non-sparking, adequately sealed, or intrinsically safe.

- Presence of a fire extinguisher

If any hot work is to be conducted on the refrigeration equipment or any associated parts, appropriate fire extinguishing equipment should be readily available. Have a dry powder or CO2 fire extinguisher adjacent to the charging area.

- No ignition sources

No person carrying out work on a refrigerating system that involves exposing any pipework that contains or has contained flammable refrigerant should use any ignition source in a way that may lead to the risk of fire or explosion. All possible ignition sources, including cigarette smoking, should be kept sufficiently far away from the site of installation, repairing, removing, and disposal when flammable refrigerant can potentially be released into the surrounding space. Prior to work taking place, the area around the equipment should be surveyed to make sure that there are no flammable hazards or ignition risks. "No Smoking" signs should be displayed.

- Ventilated areas

Ensure that the area is open or adequately ventilated before breaking into the system or conducting any hot work. A degree of ventilation should continue when the work is being carried out. The ventilation should safely disperse any released refrigerant into the atmosphere.

- Checks to the refrigeration equipment

When electrical components are being changed, they should be conducive with their purpose and set to the correct specifications. At all times MRCOOL®'s maintenance and service guidelines should be followed. If in doubt, consult the MRCOOL® technical department for assistance.
The following checks should be applied to installations using flammable refrigerants: the actual refrigerant charge is in accordance with the room size within which the refrigerant containing parts are installed; the ventilation machinery and outlets are operating adequately and are not obstructed; if an indirect refrigerating circuit is being used, the secondary circuit should be checked for the presence of refrigerant; marking to the equipment continues to be visible and legible. Markings and signs that are illegible should be corrected; and refrigerant pipe or components are installed in a position where they are unlikely to be exposed to any substance which may corrode refrigerant-containing components, unless the components are constructed of materials which are inherently resistant to corrosion or are suitably protected against corrosion.

- Checks to electrical devices

Repair and maintenance to electrical components should include initial safety checks and component inspection procedures. If a fault exists that could compromise safety, then no electrical supply should be connected to the circuit until it is satisfactorily dealt with. If the fault cannot be corrected immediately but it is necessary to continue operation, an adequate temporary solution should be used.

7. Sealed electrical components should be replaced.

8. Intrinsically safe components must be replaced.

FLAMMABLE REFRIGERANT WARNINGS

9. Cabling

Check that cabling will not be subject to wear, corrosion, excessive pressure, vibration, sharp edges, or any other adverse environmental effects. The check should also take into account the effects of aging or continual vibration from sources such as compressors or fans.

10. Detection of flammable refrigerants

Under no circumstances should potential sources of ignition be used in the search for or detection of refrigerant leaks. A halide torch (or any other detector using a naked flame) should not be used.

The following leak detection methods are deemed acceptable for systems containing flammable refrigerants. Electronic leak detectors should be used to detect flammable refrigerants, but the sensitivity may not be adequate, or may need re-calibration. (Detection equipment should be calibrated in a refrigerant-free area). Ensure that the detector is not a potential source of ignition and is suitable for the refrigerant used. Leak detection equipment should be set at a percentage of the LFL of the refrigerant and should be calibrated to the refrigerant employed and the appropriate percentage of gas (25% maximum) is confirmed. Leak detection fluids are suitable for use with most refrigerants but the use of detergents containing chlorine should be avoided as the chlorine may react with the refrigerant and corrode the copper pipework. If a leak is suspected, all naked flames should be removed/extinguished. If a refrigerant leak is found that required brazing, all of the refrigerant should be recovered from the system, or isolated by using shut off valves, in a part of the system isolated from the leak. Removal of any refrigerant should be done according to the "Removal and Evacuation" procedures in the next section.

11. Removal and Evacuation

When breaking into the refrigerant circuit to make repairs, or for any other purpose, conventional procedures should be used. However, for flammable refrigerants, it is important that the best practices should be followed since flammability is a consideration. The following procedure should be adhered to:

- Safely remove refrigerant following local and national regulations;
- Evacuate;
- Purge the circuit with inert gas (optional for A2L);
- Evacuate (optional for A2L);
- Continuously flush or purge with inert gas when using flame to open the circuit; and
- Open the circuit.

The refrigerant charge should be recovered into the correct recovery cylinders if venting is not allowed by local and national codes. For appliances containing flammable refrigerants, the system should be purged with oxygen-free nitrogen to render the appliance safe for flammable refrigerants. This process may need to be repeated several times. Compressed air or oxygen should not be used for purging refrigerant systems. For appliances containing flammable refrigerants, purging should be achieved by breaking the vacuum in the system with oxygen-free nitrogen and continuing to fill until the working pressure is achieved, then venting to the atmosphere, and finally pulling down to a vacuum (optional for A2L). This process should be repeated until no refrigerant is within the system (optional for A2L). When the final oxygen-free nitrogen charge is used. The system should be vented down to atmospheric pressure to allow work to take place. The outlet for the vacuum pump should not be close to any potential ignition sources and ventilation should be available.

12. Charging Procedures

In addition to conventional charging procedures, the following requirements should be followed. Be sure that contamination of different refrigerants do not occur when using charging equipment. Hoses or lines should be as short as possible to minimize the amount of refrigerant contained in them. Cylinders should be kept in an appropriate position according to the instructions. Be sure that the refrigeration system is grounded prior to charging the system with refrigerant. Label the system when charging is complete (if not already). Care should be taken to not overfill the refrigeration system. Prior to recharging the system, it should be pressure-tested with OFN. The system should be leak tested on the completion of charging but prior to commissioning. A follow-up leak test should be carried out prior to leaving the site.

FLAMMABLE REFRIGERANT WARNINGS

13. Decommissioning

Before carrying out this procedure, it is essential that the technician is completely familiar with the equipment and all of its details. It is recommended good practice that all refrigerants are recovered safely. Prior to the task being carried out, an oil and refrigerant sample should be taken in case analysis is required prior to the re-use of reclaimed refrigerant. It is essential that electrical power is available before the task is begun.

- Become familiar with the equipment and its operation.
- Isolate the system electrically.
- Before attempting the procedure ensure: the mechanical handling equipment is available, if required, for handling refrigerant cylinders; all personal protective equipment is available and being used correctly; the recovery process is supervised at all times by a competent person; recovery equipment and cylinders conform to the appropriate standards.
- Pump down refrigerant system, if possible.
- If a vacuum is not possible, make a manifold so that the refrigerant can be removed from various parts of the system.
- Make sure that the cylinder is situated on the scales before recovery takes place.
- Start the recovery machine and operate in accordance with instructions.
- Do not overfill cylinders (no more than 80% volume liquid charge).
- Do not exceed the maximum working pressure of the cylinder, even temporarily.
- When the cylinders have been filled correctly and the process is completed, make sure the cylinders and equipment are removed from the site promptly and all isolation valves on the equipment are closed off.
- Recovered refrigerant should not be charged into another refrigeration system unless it has been cleaned and checked.

14. Labeling

Equipment should be labeled stating that it has been decommissioned and emptied of refrigerant. The label should be signed and dated. Be sure that there are labels on the equipment stating that the equipment contains flammable refrigerant.

15. Recovery

When removing refrigerant from a system, either for servicing or decommissioning, it is recommended practice that all refrigerants be removed safely. When transferring refrigerant into cylinders, be sure only appropriate refrigerant recovery cylinders are used. Be sure that the correct number of cylinders for holding the total system charge is available. All cylinders to be used are designated for the recovered refrigerant and labeled for that refrigerant (i.e., special cylinders for the recovery of refrigerant). Cylinders should be complete with a pressure-relief valve and associated shut-off valves in good working order. Empty recovery cylinders are evacuated and, if possible, cooled before recovery occurs. The recovery equipment should be in good working order with a set of instructions concerning the equipment that is at hand and should be suitable for the recovery of the flammable refrigerant. If in doubt, MRCOOL® should be consulted. In addition, a set of calibrated weighing scales should be available and in good working order. Hoses should be complete with leak-free disconnect couplings and in good condition. The recovered refrigerant should be processed according to local and national regulations in the correct recovery cylinder, and the relevant waste transfer note arranged. Do not mix refrigerants in recovery units, especially not in cylinders. If compressors or compressor oils are to be removed, ensure that they have been evacuated to an acceptable level to make certain that flammable refrigerant does not remain within the lubricant. The compressor body should not be heated by an open flame or other ignition sources to accelerate this process. When oil is drained from a system, it should be carried out safely.

2.1 Packing List

This system comes with the following accessories. Use all of the installation parts and accessories to install the unit. Improper installation may result in water leakage, electrical shock and fire, or equipment failure.

PART	LOOKS LIKE	QUANTITY
Manual		1 (Installation)
Unit (PTACI*335DW)	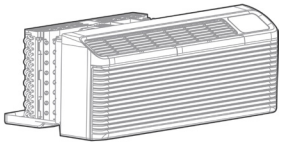	1
Sealing Sponge A	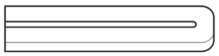	1
Sealing Sponge B		2
Screws		4 (For installing the wall sleeve)
Cable		1 (Optional)
Remote (PTRC)	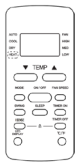	1

Items not included with the unit and must be purchased separately (if needed).

PART	LOOKS LIKE	QUANTITY
Wall Sleeve (PTWS4216FD)	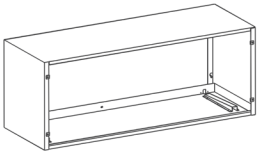	1
Grille (PTCW)	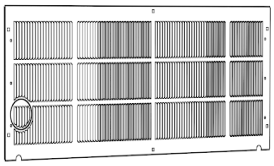	1
WIred Controller (PTCW)		1

3 UNIT INSTALLATION

3.1 Installation Overview

Note: Illustrations in this manual are for explanatory purposes. The shape of your actual unit may be slightly different.

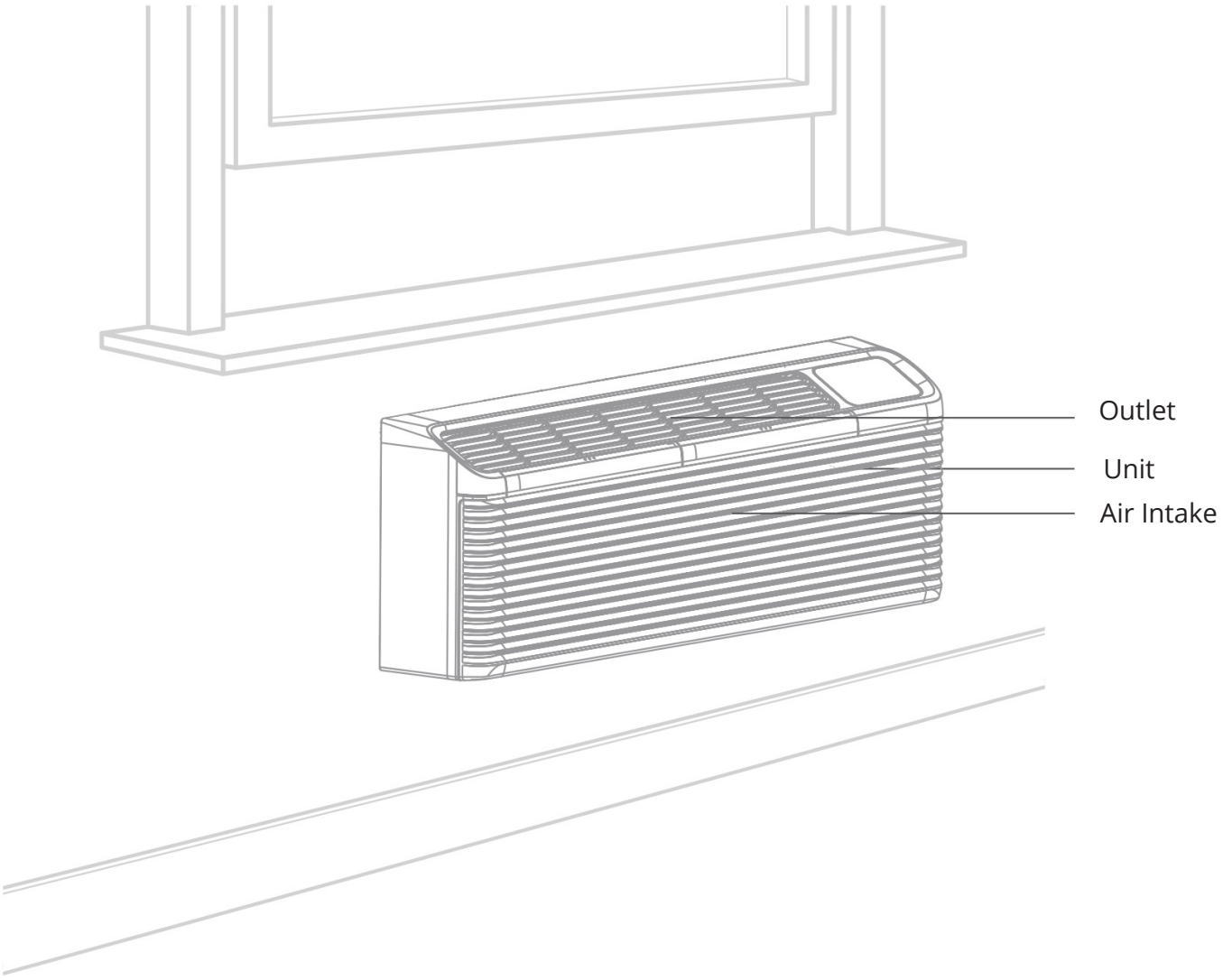

Tools NOT Included:


Gloves


Screwdriver


Pencil


Drill

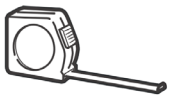
Ruler or Tape Measure


Level

3.2 Installation Location

CAUTION

- Be aware of sharp edges that can cause serious cuts.
- Use assistance when lifting the unit as it is heavy.

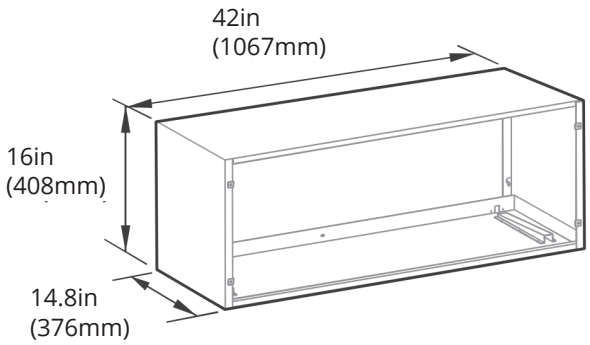

Wall sleeve size requirements (wall hole size should refer to the wall sleeve size)

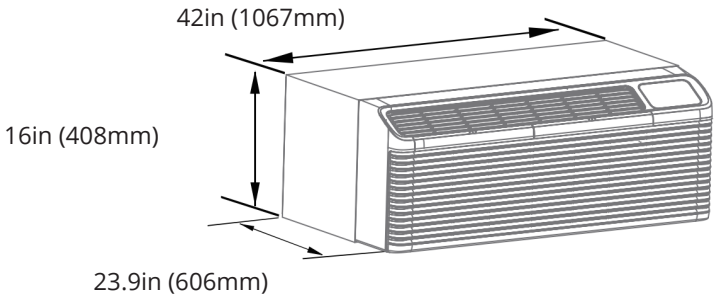

Product Size

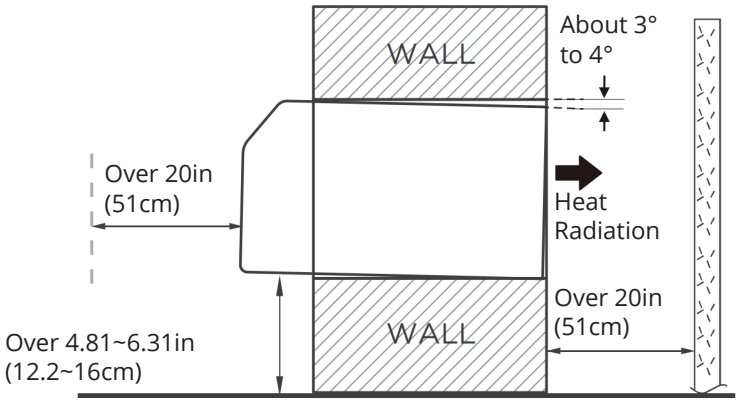

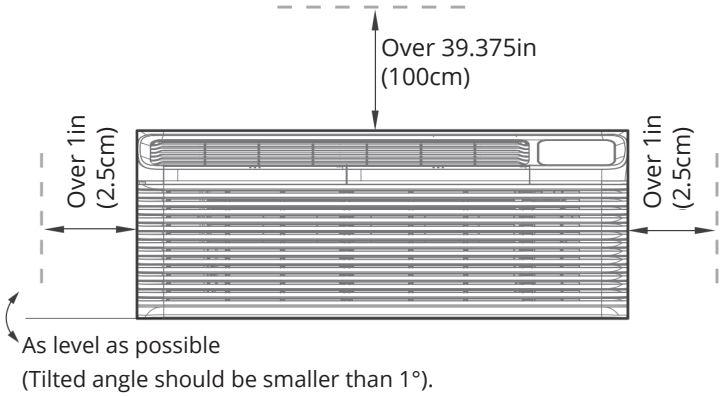

NOTE

- If using an existing wall sleeve, measure the wall sleeve dimensions before installation to ensure a good fit.
- All wall sleeves used in mounting the new unit must be in good structural condition and have a rear grille that securely attaches to the sleeve or the flange of the sleeve to secure the new unit.
- To avoid vibration and noise, ensure the unit is installed securely and firmly.
- When installing the sleeve, remove any obstacles within 20 in. (51 cm) of the back of the unit that would interfere with heat radiation and exhaust air flow.
- Do not place any barriers in the air outlet.

3.3 Installation

Step 1: Attach Sponge A to the Wall Sleeve

- If using an old wall sleeve, the sponge on the wall sleeve must be replaced. First, remove the old sponge from the sleeve and attach Sponge A from the accessories list. (See Fig. 3-1.)
- If using a new wall sleeve, simply attach Sponge A. (See Fig. 3-1.)

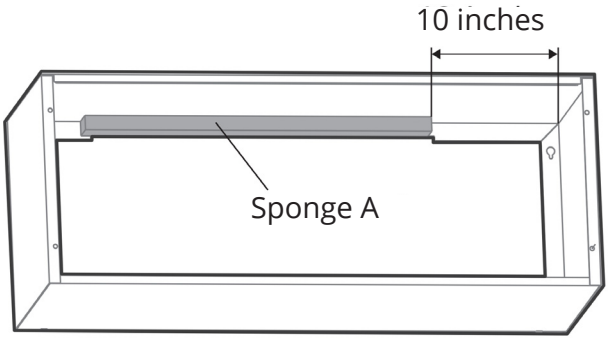

Fig. 3-1

Step 2: Attach the Wall Sleeve

- To avoid vibrations and noise, make sure the wall sleeve is installed securely and firmly. (See Fig. 3-2.)

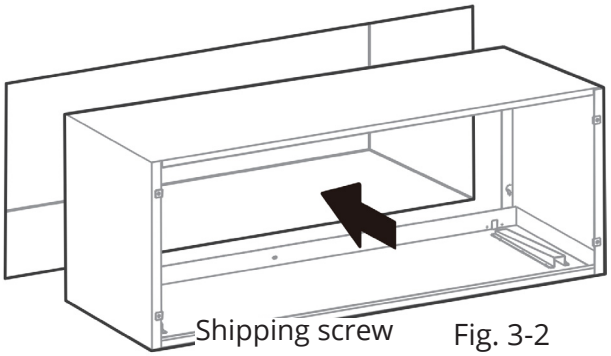

Fig. 3-2

Step 3: Remove the Front Panel

1. Pull out at the bottom to release the panel from the tabs.
2. Lift the front panel up. (See Fig. 3-3.)

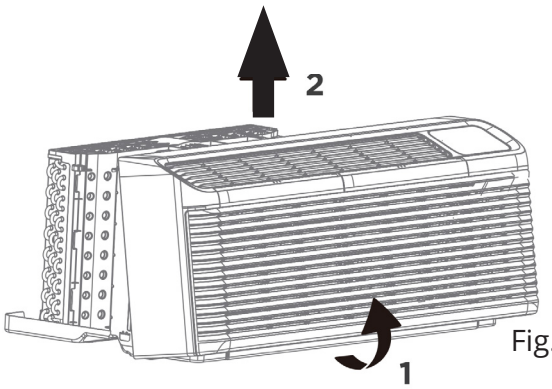

Fig. 3-3

Step 4: Open and Close the Vent Door (If Required)

- Remove the 2 shipping screws and the metal cover plate to open the vent door. (See Fig. 3-4.)
- Reinstall the metal cover plate to close the vent doors.

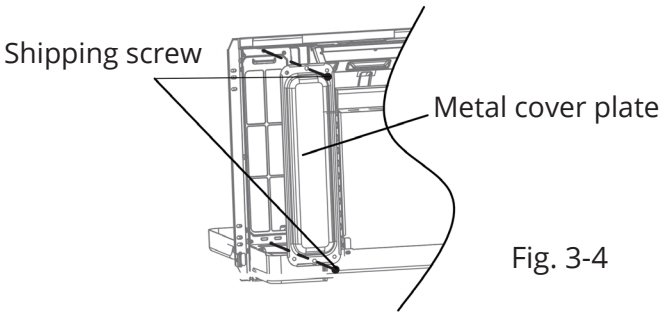

Fig. 3-4

NOTE

- The metal cover plate should be properly stored when removed. It needs to be reinstalled to close the vent door.
- When the metal cover plate is removed, some outdoor air will be drawn into the room. This will reduce heating or cooling efficiency.

Step 5: Attach Sponge B to the Rear Panel

- If using an old rear grille, remove the sponge from the rear grille, then attach Sponge B to the unit's rear panel. (See Fig. 3-5.)
- If using a new rear grille, do not attach a sponge to the rear grille: attach Sponge B to the 's rear panel. (See Fig. 3-5.)

Align the two sponge strips with the left and right edges of the rear panel, then adhere them.

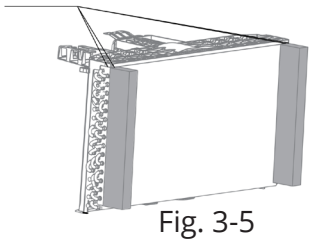

Fig. 3-5

Step 6: Install the Unit

- Lift the unit level and slide into the wall sleeve until it is firmly against the front of the wall sleeve. Secure with 4 screws and washers (supplied in the sleeve assembly) through the unit's flange holes. (See Fig. 3-6 and Fig. 3-7.)

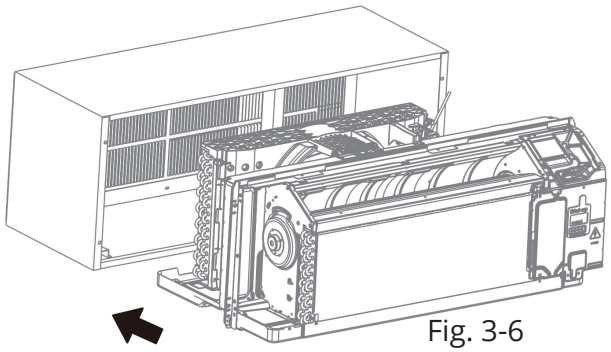

Fig. 3-6

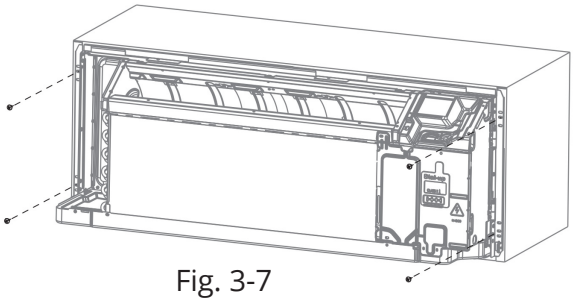

Fig. 3-7

Step 7: Install the Unit

1. Place tabs over the top rail.
2. Push inward at the bottom until the panel snaps into place. (See Fig. 3-8.)

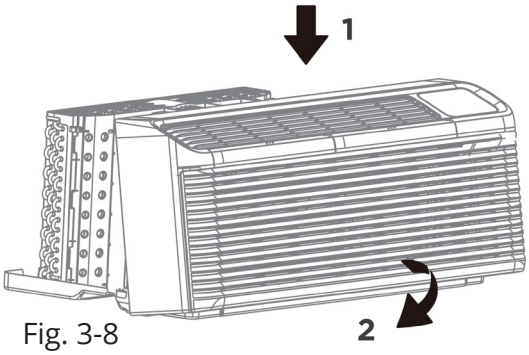

Fig. 3-8

! CAUTION

- Do not place obstacles around the air inlet or outlet of the unit.
- Always insert the filter securely and clean the filter ever 1-3 months as required.

4.1 DIP Switch Configurations

CAUTION

- The unit must be powered off to effectively change the DIP switch configuration.

Removing the Front Panel

Step 1: Pull out at the bottom to release it from the tabs, then lift the front panel up. (See Fig. 4-1.)

Step 2: Remove the rubber grommet to set the DIP switches. Reinstall the rubber grommet after you finish. Do not discard the rubber grommet. (See Fig. 4-2.)

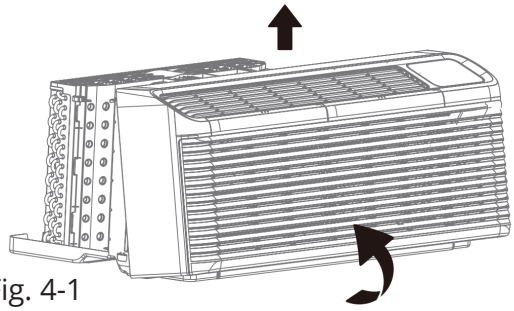

Fig. 4-1

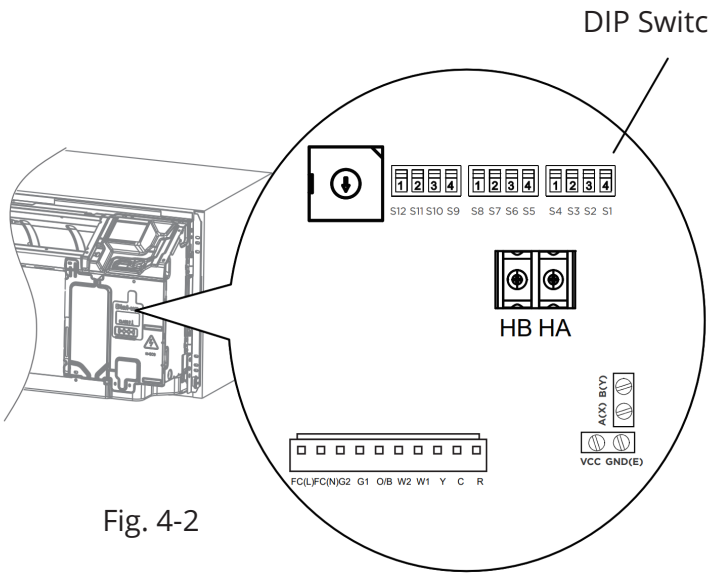

Fig. 4-2

Dip Switch Configurations

See Table 4.1 (page 16) and Fig. 4-3 for DIP switch configurations and functions of each DIP switch position.

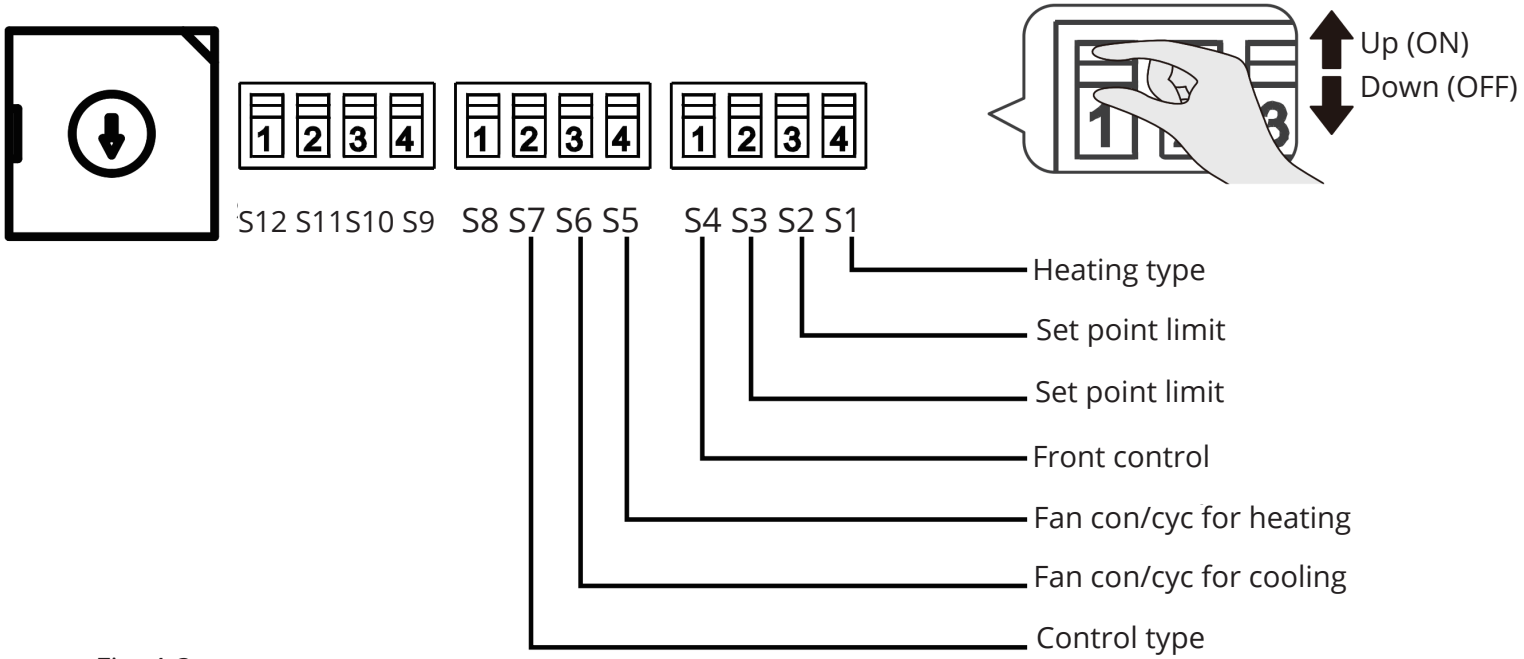

Fig. 4-3

Table 4.1 - DIP Switch Configurations

DIP Switch	Up (ON)-1	Down (OFF)-0
S1	Heating mode with only electric heating	Heating mode with both electric heating and heat pump heating
S2 S3	Setting Temperature Range: S2=OFF, S3=OFF: 60°F-86°F; S2=OFF, S3=ON: 63°F-80°F; S2=ON, S3=OFF: 65°F-78°F; S2=ON, S3=ON: 68°F-75°F.	
S4	1 (Turn off front control) ON	0 (Turn off front control) OFF
S5	In heating mode, when the indoor fan is On the continuous operation is enabled	In heating mode, when the indoor fan is Off the continuous operation is disabled
S6	In cooling mode, when the indoor fan is On the continuous operation is enabled	In cooling mode, when the indoor fan is Off the continuous operation is disabled
S7	Wall thermostat control	The display panel and wall thermostat control operate simultaneously

Electric Heat Only

This setting is typically used for emergency heating.

Set-Point Temperature Limits

Provides a restricted range of temperature control.

Heat and Cool Fan CON/CYC DIP Switch

Allows the fan to operate in continuous or cycle modes while the unit is in Heating and Cooling mode.

CON (Continuous)

Allows the fan to run continuously, circulating air even when the temperature setting has been satisfied. This switch helps maintain the room temperature closer to the thermostat setting.

CYC (Cycle)

This setting allows the fan to cycle on and off with the compressor or electric heater. The fan stops for a short time after the temperature setting is satisfied.

Wall Thermostat Control

A wall thermostat can be connected to the unit. If the DIP switch is set to ON when the unit is controlled by the thermostat, it will only process inputs from the thermostat. Inputs from the panel, themostat, etc., will be invalid. If the DIP switch is set to OFF, the unit can be controlled by the panel and thermostat together. When the thermostat outputs a control signal to the unit, the unit will prioritize the input from the thermostat.

4.2 DIP Switch Configurations by Panel Control

! CAUTION

The unit must be in stand-by status to effectively change the DIP switch configuration using the panel.

- Press the Up and Down buttons together for 3 seconds to activate the DIP switch configurations via panel control. (See Fig. 4-4.)
- See Table 4.2 for DIP switch configurations and functions via panel control.

Note: To exit the DIP switch configurations via panel control, provide no input for 30 seconds or press and hold the Up and Down buttons together for 3 seconds and the unit will save the previous settings.

- The LED will display Sx, Fx, (x could be 1,2,3 etc.) and other letters, such as ON, OF, HY, EH, ETC>, are used to indicate the current function serial number function switch status. (See Fig. 4-4.)
- Press the Up button to adjust the DIP switch serial number.
- Press the Down button to adjust the function switch corresponding to the previously-selected serial number.

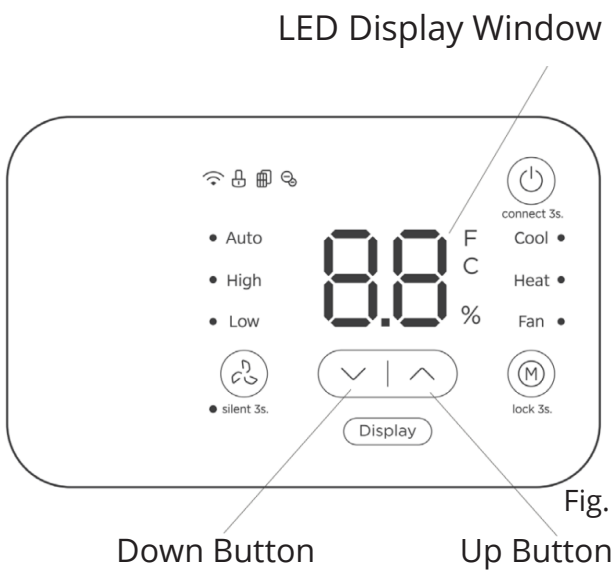

Fig. 4-4

Table 4.2 - DIP Switch Configurations

Aux. Display	DIP Switch	Up (ON)-1	Down (OFF)-0
SO	\	1 (Settings via panel are valid), LED displays AC	0 (Settings via DIP switch panel are valid, query only) LED displays DP
S1	S1	Heating mode with only electric heating. LED displays EH	Heating mode with both electric heating and heat pump heating. LED displays HY
S2 Display Lower Temperature Limit S3 Display Upper Temperature Limit	S2 S3	Setting Temperature Range: S2=OFF, S3=OFF: 60°F-86°F; S2=OFF, S3=ON: 63°F-80°F; S2=ON, S3=OFF: 65°F-78°F; S2=ON, S3=ON: 68°F-75°F.	
S4	S4	1 (Turn off front control) ON	0 (Turn off front control) OFF
S5	S5	In heating mode, when the indoor fan is On the continuous operation is enabled. LED displays ON	In heating mode, when the indoor fan is Off the continuous operation is disabled. LED displays OF
S6	S6	In cooling mode, when the indoor fan is On the continuous operation is enabled. LED displays ON	In cooling mode, when the indoor fan is Off the continuous operation is disabled. LED displays OF

Aux. Display	DIP Switch	Up (ON)-1	Down (OFF)-0
S7	S7	Wall thermostat control. LED displays "TH"	The display panel and wall thermostat are controlled simultaneously. LED displays "HY"
F1	\	Select the fresh air or ERV fan speed under air conditioning control. "Au" means Auto, "80" means High, "60" means Medium, "40" means Low, "OF" means OFF (optional).	
F2	\	Smart humidity control settings: 40-60, "Au" means automatic,"OF" means OFF. This needs to be activated when shuting down Cooling Mode.	
F3	\	Negative ions (optional): "ON" means that the function is ON, "OF" means the function is OFF.	
F4	\	Set low temperature protection point: 0-16° Celsius or to corresponding degree's in Fahrenheit, "OF" means OFF.	
F5	\	Set high temperature protection point: 30-37° Celsius or to corresponding degree's in Fahrenheit, "OF" means OFF.	

NOTE

- If S0 is selected as AC (the switch for the air conditioning panel control), refer to the previous section and adjust the DIP switch S4 to OFF. By doing this, the functional status displayed on the S4 channel of the air conditioning panel will take effect.
- After all is set, press the Up and Down buttons together for 3 seconds to exit the operation interface and cut off the power. When restarted, the settings are activated.
- When S0 is selected as DP, the functional status displayed for S0-S7 can only be viewed and cannot be adjusted using the down button.
- If no negative ions are present, skip F3. If a 24V wire controller control is selected, S5 and S6 will be skipped. If the dial plate is not connected, S4 will be skipped. If there is no fresh air module, F1 will be skipped.
- Negative ion function (optional): when the function is on, the ion generator is energized and will help to remove pollen and impurities from the air and trap them in the filter.
- Low temperature protection: when the indoor temperature abnormally decreases (below the set threshold), it automatically triggers a protection mechanism to prevent the equipment from operating under overcooling or the ambient temperature from continuously being too low.
- High temperature protection: when the indoor temperature abnormally increases (above the set threshold), it automatically triggers a protection mechanism to prevent the equipment from overheating or the ambient temperature from continuously being too high.

4.3 Wall Thermostat Terminal

CAUTION

Only trained, qualified personnel should access the electrical panel on the unit and install electrical accessories. Please contact a qualified technician for assistance.

Step 1: Thermostat Wire Routing

- Thermostat wire is field-supplied. The recommended wire size is 18-20 gauge solid thermostat wire.

NOTE

- It is advised that extra wires should be run to the unit in case any are damaged during installation. Thermostat wire should always be routed around or under but never through the wall sleeve. The wire should then be routed behind the front panel to the terminal connector. (See Fig. 4-5.)
- Refer to the thermostats installation instructions for details on installing the wall thermostat.

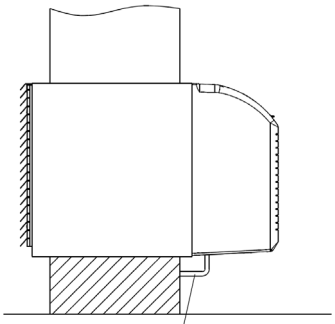

Thermostat Wire Routing
(Under Sleeve, Behind Front Panel)

Fig. 4-5: Proper Wire Routing Beneath the Unit

Step 2: Installation Instructions for Some Types of Wall Thermostats

- Remove the 4 screws and take the cover panel down. (See Fig. 4-6.)

CAUTION

- Do not discard the 5 screws as they will need to be reinserted after completion.
- If you need to route the wire out through the fireproof sheet-metal area, you may remove the rubber grommet, pierce it at the required spot, and then reinstall it. Do not discard the rubber grommet.

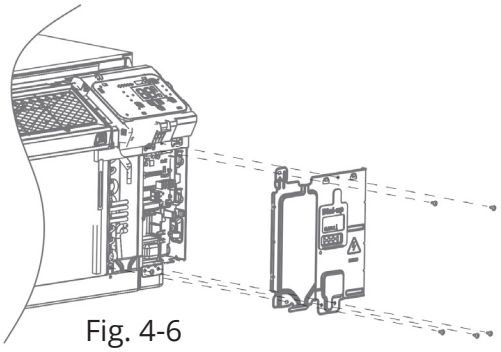

Fig. 4-6

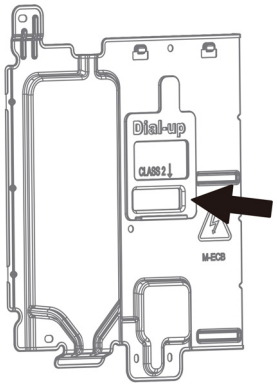

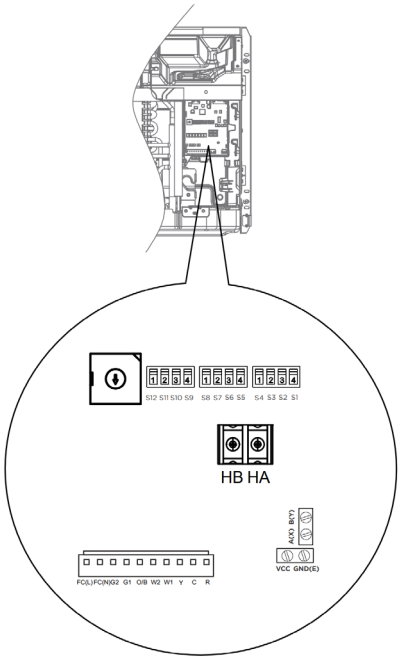

Fig. 4-7

1. Wall Thermostat (24VAC Optional)

Terminal of PTAC for alternate wall thermostat

Mode A (optional)

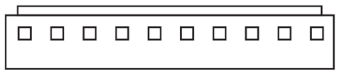

Mode B (optional)

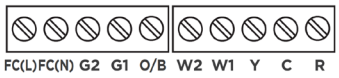

Terminal	Designation	Mode A Wire Color
FC (L)	Front desk control terminal L	Brown
FC (N)	Front desk control terminal N	Pink
G2	Low fan speed	Purple
G1	High fan speed	Green
O/B	4-2ay valve; Reverse cycle (energized in heat)	Blue
W2	Electrical heater 2	White
W1	Electrical heater 1	White
Y	Compressor	Yellow
C	24VAC terminal N (Neutral), Common	Black
R	24VAC terminal L	Red

2. Non-Polarity Wired Controller (Optional)

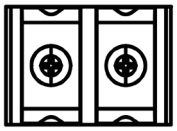

HB HA

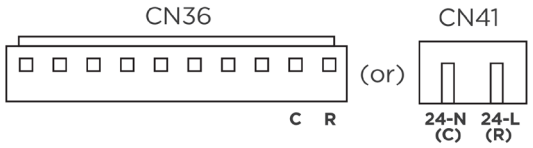

HA	Communication	Non-Polarity Wired Controller
HB		
R	24V AC	
C		

- The network address is configured via DIP switch F1 and the rotary switch. The corresponding address assignment is as follows:

S12	S11	Base Address
OFF	OFF	0
OFF	ON	16
ON	OFF	32
ON	ON	48

3. Wired Controller (12V) (Optional)

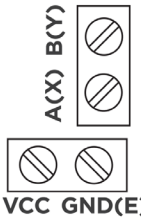

VCC	12V, RS485 Wired Controller
GND	
A	
B	

4. CCM (Optional)

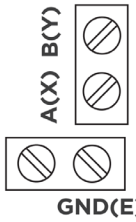

E	RS485 CCM
X	
Y	

- The network address is configured via DIP switch F1 and the rotary switch. The corresponding address assignment is as follows:

S12	S11	Base Address
OFF	OFF	0
OFF	ON	16
ON	OFF	32
ON	ON	48

! CAUTION

UNIT DAMAGE HAZARD

Failure to follow this caution may result in equipment damage or improper operation. Improper wiring may damage the unit's electronics. Common bussing is not permitted. Damage or erratic operation may result.

NOTE

- Use terminal 4-way for heat pump connection only.
- The wall thermostat must be a heating changeover 4-way valve.
- For thermostats that have only one fan speed output (on or auto), the fan speed is determined by how the terminal connector is wired. If a Low fan speed is desired, wire the G output from the thermostat to (G2) on the unit's terminal block. If a High fan speed is desired, wire the G output from the thermostat to (G1) on the units terminal block.
- The range of the set temperature of the wall thermostat must align with the range of the DIP switch setting.
- The wall thermostat must be set according to the proper unit type: heat pump or no heat pump.
- When O/B and W1; O/B and W2; or O/b and both W1 and W2 signals are present, the unit will automatically manage heating via the heat pump and electric heat. The unit has two electric heating input terminals, W1 and W2. If only one of W1 or W2 is energized, the unit will only turn on the high-stage electric heat (if equipped). If both W1 and W2 are energized simultaneously, the activation of electric heating is controlled by the unit itself.
- If the S7 is set to simultaneous control by the wall thermostat and the display panel, when the terminal signal input is correct, the LED will display LC.
- Please do not remove the control panel.

Front Desk Control

The controller can handle a switch signal from FC (L) and FC (N) inputs are called front desk control. Input must be 24VAC. If the system does not receive a 24VAC signal, it will turn off; otherwise, the unit runs in normal control. The DIP switch can control the Front Desk Control Feature. If the DIP switch is in the Down position, the unit will be turned off; otherwise, the unit runs in normal control.

4.4 Operation

NOTE

The control panel keypad will look like the following Fig. 4-8.

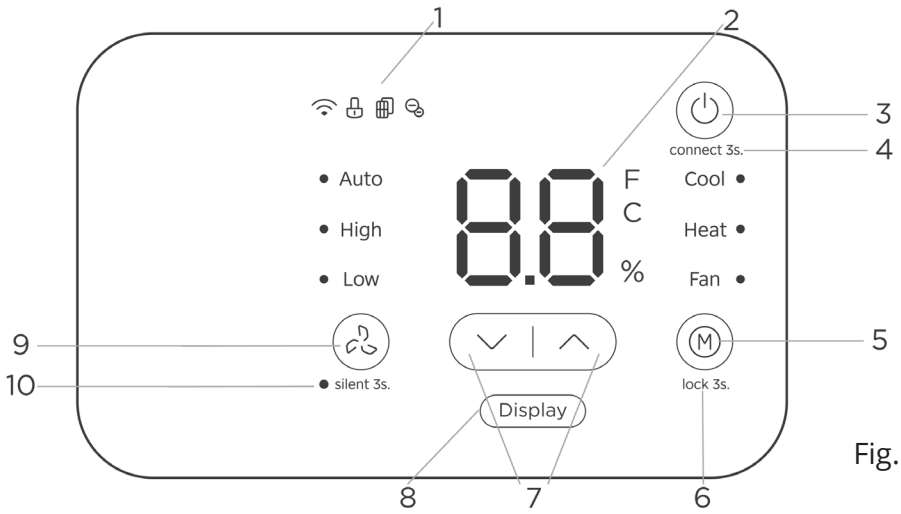

Fig. 4-8

Num.	Icon	Description
1	Lock Icon	Icon appears to indicate that the panel lock has been turned off.
	Check Filter Icon	Icon appears to indicate that the air filter needs to be cleaned.
	Connect Icon (optional)	Icon appears to indicate that the wireless module has been activated.
	Negative Ion Icon (optional)	Icon appears to indicate that the negative ion function has been activated.
2		Shows the set temperature in °F or °C. While on Fan Only mode, it shows the room temperature. **Control Code:** LC - Pads on the control panel are not available. The unit can be set by using the wire controller only. FC- Pads on the control panel and the wire controller are not available. The unit can be set by using Front Desk Control only. **Error Codes:** The unit may stop operating due to a malfunction with the unit. If this occurs, an error code may appear on the display, as demonstrated below. Wait 10 minutes and the problem may resolve itself. If not, disconnect the power and connect again. Turn the unit on. If the problem persists, disconnect the power and contact a technician or MRCOOL® Customer Service. Error codes appear and begin with the letters noted below in the window display of the indoor unit: EH (xx), EL (xx), EC (xx), PH (xx), PL (xx), PC (xx). **Note:** When an error occurs, unplug the unit and plug it back in. If the error code repeats, contact a technician or MRCOOL® Customer Service. **Other Codes:** LO - Room temperature is lower than 32°F (0°C). HI - Room temperature is higher than 99°F (37°C). FP - Low temperature protection. HP - High temperature protection. **Note:** All the illustrations in this manual are for explanatory purposes only. Your unit may be slightly different. The actual shape should prevail.
3	Power - Function	Press the power button to turn the unit ON or OFF.

Num.	Icon	Description
4	connect 3s. Wireless Connection (Optional)	To connect your unit to wireless connectivity, press the power button for 3 seconds to initiate the wireless connection mode. The display shows "AP" to indicate the unit is in the wireless connection mode. Refer to the wireless section for further instructions. If connection is successful within 8 minutes, the unit will exit the wireless connection mode automatically and the connect LED will illuminate. If connection fails within 8 minutes, the unit exits wireless connection mode automatically and the connect LED will not illuminate. After the wireless connection is successful, you can press and hold the Power and Down buttons for 3 seconds to turn off the wireless function, and the LED display will show "OF" for 3 seconds. Press the Power and Up buttons for 3 seconds to turn the wireless function back on, and the LED display will show "ON' for 3 seconds.
5	Mode - Function	Push this button to cycle through the modes from Cool-Heat-Fan-Cool. The indicator light beside the "Mode" option will illuminate, identifying the mode selected. To operate in Cool mode: Choose Cool mode to set the cooling function. Use the Up (∧) and Down (∨) buttons to choose the desired temperature. When Cool mode is selected, the fan speed can be adjusted by pressing the Fan button. To operate in FAN only: Use this function only when cooling is not desired. You can choose any fan speed you prefer. During his function, the display will show the actual room temperature, not the set temperature, as in the cooling mode. In Fan Only mode, the set temperature cannot be adjusted. To operate in Heat mode: Choose Heat mode to set the heating function. Use the Up and Down buttons to choose the desired temperature. When Heat mode is selected, the fan sped can be adjusted by pressing the Fan button. Note: The reverse cycle and electric heater cannot be run at the same time. In the following cases, it is normal that the reverse cycle does not operate. Note: If the unit has a DIP switch feature, the temperature range is controlled by the DIP switch. See DIP Switch Configurations for details.

Num.	Icon	Description
6	Panel Locking - Function (lock 3s.)	Pressing the Mode button for 3 seconds will turn the lock panel function on or off. The panel locking indicator turns on when you lock the control panel. Note: When the control panel is locked, pressing any other keys will make the panel locking indicator flash for 3 seconds.
7	Up and Down Buttons	Push the Up or Down buttons to increase or decrease the set temperature of the unit in cooling or heating mode. The temperature can be set by increments of 1°F (1°C). The setting temperature appears on the display. Note: When the machine is turned on, press and hold the "∧" and "∨" buttons together for 3 seconds to alternate the temperature display between °F and °C.
8	Display Display Button	Press the Display button to turn the LED display on and off. Pressing the Display button for 3 seconds will reset the filter clean indicator. This feature is a reminder to clean the air filter for normal operation. The filter indicator will illuminate after 250 hours of operation.
9	Fan Speed - Function	Every time you push this button, the fan speed cycles through the settings as follows: Auto-High-Low-Auto.
10	Silent - Function (Optional) (silent 3s.)	Pressing the Fan button for 3 seconds will turn the silent function on or off. The fan will run on the silent setting.

4.5 Accessories

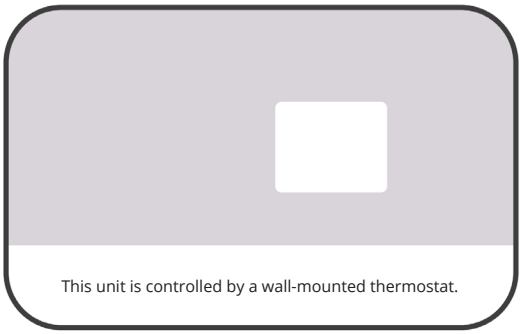

Control Panel Sticker

NOTE

When the unit displays "LC<", the pads on the control panel are not available. You can install the accessory on the control panel.

4.6 App Setup & Operation

Wireless Control Feature

Applicable System: iOS, Android:

- Please keep your app up to date with the latest version.
- Not all of Android and iOS systems are compatible with the app. We declare explicitly that MRCOOL® will not be held responsible for any issue as a result of the incompatibility.

Wireless Safety Strategy:

- The Smart Kit only supports WPA-PSK/WPA2-PSK encryption and no encryption. WPA-PAK/WPA2-PSK encryption is recommended.

Notice

- Network issues may occasionally cause timeouts. The unit display and the app may become unsynchronized but this will resolve itself when the network is restored.
- Smart phone cameras need to be 5 megapixels or above to scan the QR code correctly.
- If the network remains unavailable, it may be necessary to run the configuration process again.
- The app is subject to updates without prior notice for improvement of product function.
- The actual network configuration process may vary slightly from the manual.

Specification

- Wireless Module Model: EU-SK105, US-SK105, EU-SK106, US-SK106, EU-SK107, US-SK107, EU-SK109, US-SK109, EU-SK110, US-SK110
- Antenna Type: Printed PCB Antenna
- Frequency Band: 2400-2483.5MHz
- Operation Temperature: 32°F~113°F (0°C~45°C)
- Operation Humidity: 10%~85%
- Power Input: DC 5V / 500mA
- Maximum TX Power: < 20dBm

Preparation

- Ensure your mobile device is connected to your wireless router. The wireless router should already be connected to the Internet before registering the user of configuring the network.
- It is recommended you remove unneeded wireless networks from your phone to avoid problems during the configuration process.

Download and Install the App

1. Be sure your mobile phone is connected to your home network.
2. Scan the QR code below to download the MRCOOL® Comfort app from the app store or search for it directly on the Google Play Store or Apple's App Store.

Android **iOS**

Network Configuration

Notice:

- Remove or "forget" other unneeded wireless networks, especially if they are nearby. Your device should be connected to the same network you will be connecting the unit to.
- As your phone will temporarily connect to the unit, your phone must be set to automatically reconnect to your wireless network when the process is complete.

Reminder:

- All the steps for network configuration must be completed within 8 minutes after powering on the unit, otherwise you will need to restart the unit.

Note

- Make sure your devices are powered on.
- Keep your mobile phone near the unit when you are working towards network configuration.
- Connect your mobile phone to your home wireless network and make sure you know the network password.
- Check if your router supports the 2.4 GHz wireless band and that it is turned on. If you are not sure whether the router supports the 2.4 GHZ band, please contact the manufacturer of the router.
- The device cannot connect to the wireless network that requires authentication. Typically the wireless network in public areas such as hotels, restaurants, etc., work in this manner. Please connect to a wireless network that does not require authentication.
- It is recommended to use a wireless network name that only contains letters and numbers and does not contain special characters.
- If your wireless network name contains special characters, please change it on your router. Afterward, your phone and other devices will need to reconfigure their wireless connection.
- Turn off the WLAN+ (Android) or WLAN Assistant (iOS) function of your mobile phone when configuring the unit.
- If your device was connected to a previous wireless network, but it needs to reconnect to your home network, please click the "+" on the app's home page and add your device again by device category and model according to the instructions on the app.

Register and Log-In

- Open the MRCOOL® Comfort app. Log-in directly if you have an existing MRCOOL® Comfort account or sign up to create a new account. Alternatively, you can also use a third-party log-in platform.



Connecting the Device

1. Please make sure your mobile phone is connected to your wireless network and that your Bluetooth is on. If it is not turned on, go to your phone's settings and turn both on.
2. Please power on the devices you want to connect to.
3. Open the MRCOOL® Comfort app on your phone.
4. If the message "Smart devices discovered nearby" appears, click on this to add the devices that were automatically discovered.

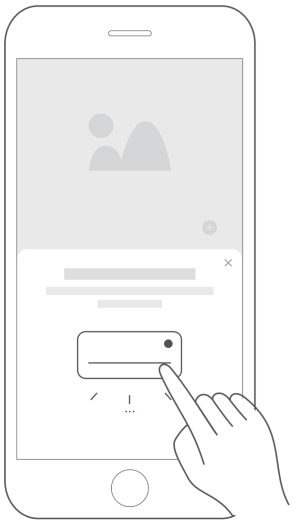

5. If that message does not appear, tap on "+" and select your device in the list of available devices nearby. If your device is not listed, please add your device manually by selecting the "add device" category first.

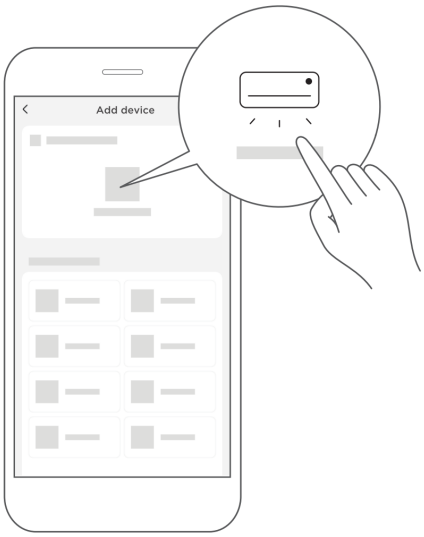

6. Follow the steps in the app to connect your device to the wireless network. If your device will not connect, follow the additional instructions in the "add device" section.



Controlling the Device

After pairing successfully, a card will be created for the device in the MRCOOL® Comfort app. Shortcuts for basic functions will appear on the card and include changing the temperature or switching the device On/Off. Tapping on the card will reveal additional features and settings. The actual UI design may look different from examples due to app updates.

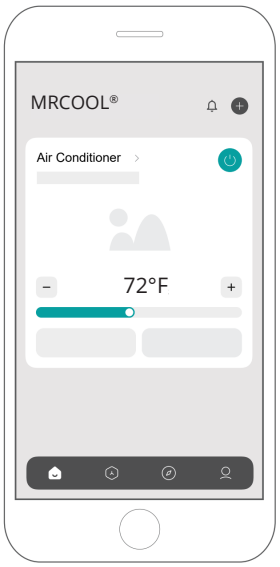

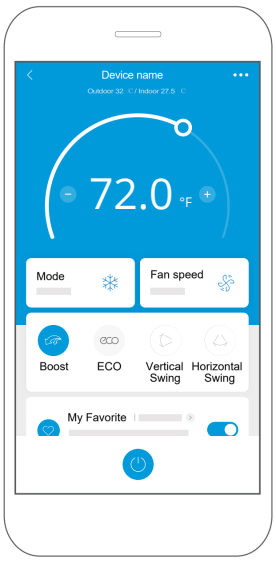

5 POST-INSTALLATION

5.1 Care & Maintenance

CAUTION

- Follow the instructions to avoid damaging the unit. Failure to follow this cautionary notice may result in equipment damage or improper operation.
- Avoid airflow restrictions as they can cause damage to the unit.

Front Panel and Case

- Always turn off the unit and disconnect the power supply before cleaning or maintenance.
- Only use a soft, dry cloth to wipe the unit clean. You can use a cloth soaked in warm water to wipe it clean if the unit is severely dirty.
- Do not use chemicals or chemically treated cloths to clean the unit.
- Do not use benzene, paint thinner, polishing powder, or other solvents to clean the unit as this can cause the plastic surface to crack or deform.
- Do not use water hotter than 104°F (40°C) to clean the front panel. This can cause the panel to deform or become discolored.

Outdoor Coil

- The coil on the outdoor side of the unit should be checked regularly.
- Any maintenance and cleaning of the outdoor coil should be performed by a licensed service technician.

NOTE

Never use high-pressure water on the coil.

CAUTION

- Failure to follow this cautionary notice may result in equipment damage or improper operation.
- Do not operate the unit without the filters in place. If a filter becomes torn or damaged, it should be replaced immediately.
- Operating without filters or with a damaged filter will allow dirt and dust to reach the indoor coil and reduce cooling, heating, airflow, and efficiency of the unit.
- Airflow restriction may cause damage to the unit.

Air Filters

- Regular filter cleaning is the best method to maintain the unit and its efficiency, decreasing the cost of operation and preventing the risk of damage to the unit.

Cleaning the Air Filters

Vacuum off heavy debris and run water through the filters to clean. Make sure to dry the filters thoroughly before re-installing.

Removing Air Filters

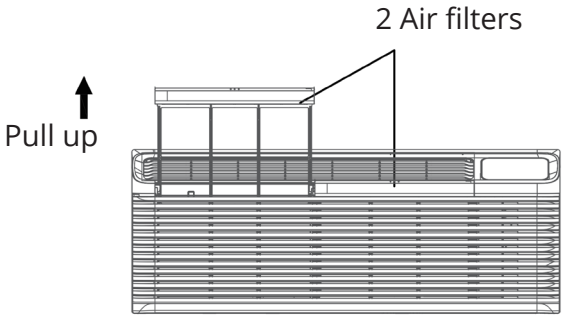

Fig. 5-1

Replacing Air Filters

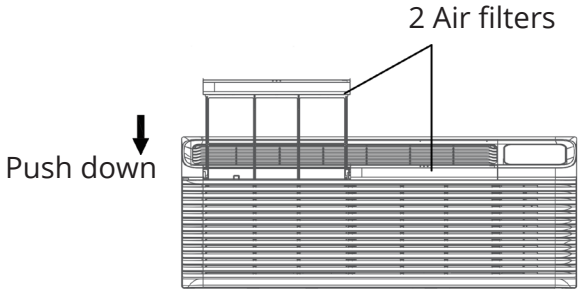

Fig. 5-2

! CAUTION

- Please contact an authorized service technician for cleaning the vent door filter of the unit.
- Turn off the unit before cleaning.

Vent Door Filter

- Clean the vent every 3 months or as required.
- Make sure to remove the shipping screw from the bent door. (See Fig. 3-4.)
- Press down and remove the vent door as shown. (See Fig. 5-3.)
- Clean the filter. Dry thoroughly before replacing.
- Reinstall the vent door filter.

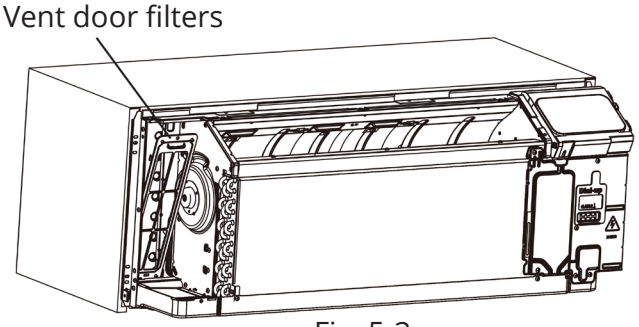

Fig. 5-3

5.2 Troubleshooting

Before contacting a service technician or MRCOOL® Customer Service please review the following troubleshooting solutions. This list includes common occurrences that are not the result of defective workmanship or materials in this appliance.

Problem	Solution
Unit does not start	The unit may be unplugged. Check that the plug is set securely into the wall receptacle. Note: The plug has a test/reset button, make sure that the plug has not tripped.
	Fuse may have blown. Replace the fuse. See note 1 on pg. 32.
	The power to the receptacle may be off. Turn the breaker to the receptacle on. See note 1 on pg. 32.
Unit is not cooling/heating room	The unit's air discharge section is blocked. Make sure the curtains, blinds, or furniture are not restricting or blocking the units airflow.
	The temperature setting is not high or low enough. Note: Set-point limits may not allow the unit to heat or cool the room to the desired temperature. Check the section on DIP switch settings. Reset to a lower or higher temperature setting.
	The unit's air filters are dirty. Remove and clean the air filters.
	The room is excessively hot or cold when the unit is turned on. Start heating or cooling early enough so the room reaches a comfortable temperature and the outdoor temperature, cooking, or large gatherings don't allow the space to become too hot or cold.
	The vent door has been left open. Close the vent door.
	The unit may be in protection mode. Check the DIP switch and wall thermostat settings to reach desired comfort.
	The compressor is in a time delay. Wait approximately 3 minutes for the compressor to start.
Display has strange numbers/characters on it	The unit may be in protection mode.
Unit is making noises	Clicking, gurgling, and whooshing noises are normal during unit operation.
Water is dripping outside	If a drain kit has not been installed, condensation runoff during very hot and humid weather is normal. See note 2 on pg. 32. If a drain kit has been installed and is connected to a drain system, check gaskets and fittings around the drain for leaks and plugs.
Water dripping inside	The wall sleeve has not been installed level. The wall sleeve must be installed level for proper condensation drainage. Check that the installation is level and make any necessary adjustments.
Ice or frost forms on the indoor coil	Low outdoor temperature. When the outdoor temperature is approximately 55°F or below, frost may form on the indoor coil when the unit is in Cooling mode. Switch the unit to Fan operation until the ice or frost melts.
	The filters are dirty. Remove and clean the filters.

Problem	Solution
Compressor protection	The power may have cycled, so the compressor is in restart protection mode. Random compressor restart: Whenever the unit is plugged in or power has been restarted, a random compressor restart will occur. After a power outage, the compressor will restart after approximately 3 minutes. Compressor protection: To prevent short cycling of the compressor, there is a random startup delay of 3 minutes and a minimum compressor run time of 3 minutes.
Electric heating failure	Have a professional clean the evaporator once every three months.

Notes:

1. If the circuit breaker is tripped or the fuse is blown more than once, contact a qualified service technician.
2. If the unit is installed where condensation drainage could drip in an undesirable location, an accessory drain kit should be installed and connected to the drain system.



MRCOOL®

COMFORT MADE SIMPLE

PTAC

The design and specifications of this product and/or manual are subject to change without prior notice.
Consult with the sales agency or manufacturer for details.