This product utilizes **R-32** *refrigerant*

MRCOOL® PTAC

SERVICE MANUAL

MODELS:

PTACI*335DW



Read this manual carefully before installation and keep it where the operator can easily find it for future reference.

Due to updates and constantly improving performance, the information and instructions within this manual are subject to change without notice.

Version Date: May 12, 2026

Please visit www.mrcool.com/documentation to ensure you have the latest version of this manual.

MRCOOL®
COMFORT MADE SIMPLE

CONTENTS

1 SAFETY 2

2 SYSTEM OVERVIEW 9

2.1 Model Reference 9

2.2 Specification Table 10

2.3 Unit Components 11

2.4 Dimensions 11

2.5 Refrigerant Cycle Diagram 12

2.6 Electrical Wiring Diagrams 13

INSTALLATION 17

3 3.1 Packing List 17

3.2 Installation Overview 18

3.3 Installation Location 19

3.4 Installation Step-by-Step 20

FUNCTION & PANEL CONTROL 22

4 4.1 Display Functions 22

4.2 Safety Features 24

4.3 Basic Functions 24

4.4 DIP Switch Configurations 29

4.5 DIP Switch Configurations by Control Panel 31

4.6 Wall Thermostat Terminal 32

TROUBLESHOOTING 36

5 5.1 Error Display 36

5.2 Information Inquiry 37

5.3 Replacement Parts 39

5.4 Troubleshooting by Error Code 40

MAINTENANCE 52

6 6.1 Temperature Sensor Check 52

6.2 Compressor Check 52

6.3 Continuity Check 53

6.4 Four-Way Valve Check 54

TEMPERATURE SENSOR RESISTANCE TABLE 56

7 SYSTEM PRESSURE TABLE 58

8

Safety Precautions

Read Before Using

Incorrect usage may cause serious damage or injury.

The symbols below are used throughout this manual to indicate instructions that should be followed closely or actions that should be avoided to prevent death, injury, and/or property damage.

WARNING	**Indicates the possibility of personal injury or loss of life.**
CAUTION	**Indicates the possibility of property damage or serious consequences.**

WARNINGS FOR PRODUCT INSTALLATION

- Plug in the power plug properly. Otherwise, it may cause electric shock or fire due to excess heat generation. Do not operate or stop the unit by inserting or pulling out the power plug. It may cause electric shock or fire due to heat generation. Do not damage or use an unspecified power cord. It may cause electric shock or fire.
- The power cord plug should be inserted into a standard socket.
- Always install a circuit breaker and a dedicated power circuit. Incorrect installation may cause fire and electric shock. Do not operate with wet hands or in damp environment. It may cause electric shock . Do not direct airflow at room occupants only. This could damage your health.
- Always ensure effective grounding. Incorrect grounding may cause electric shock. Do not allow water to run into electric parts. It may cause failure of machine of electric shock.
- Do not modify power cord length or share the outlet with other appliances. It may cause electric shock or fire due to heat generation.
- Unplug the unit if strange sounds, smell, or smoke comes from it. It may cause fire and electric shock.
- Do not use the socket if it is loose or damaged. It may cause fire and electric shock. Do not open the unit during operation. It may cause electric shock.
- Do not use the power cord close to heating appliances. It may cause fire and electric shock. Do not use the power cord near flammable gas or combustibles, such as gasoline, benzene, thinner, etc. It may cause an explosion or fire.
- Ventilate room before operating air conditioner if there is a gas leakage from another appliance. It may cause explosion, fire and, burns. Do not disassemble or modify unit. It may cause failure and electric shock.

CAUTION

- When the air filter is to be removed, do not touch the metal parts of the unit. It may cause an injury.
- Ventilate the room well when used together with a stove, etc. An oxygen shortage may occur.
- Do not use strong detergent such as wax or thinner but use a soft cloth.
- Appearance may be deteriorated due to change of product color or scratching of its surface. Do not clean the air conditioner with water.
- Water may enter the unit and degrade the insulation. It may cause an electric shock. Do not use for special purposes. Do not use this air conditioner to preserve precision devices, food, pets, plants, and art objects. lt may cause deterioration of quality, etc.
- Operation with windows opened may cause wetting of indoor and soaking of household furniture.
- When the unit is to be cleaned, turn off the circuit breaker.
- Do not clean unit when power is on as it may cause fire and electric shock, it may cause an injury.
- Always insert the filters securely. It can be caused failure if operated without filters. Please clean filter once every two weeks.

CAUTION CONT.

- Hold the plug by the head of the power plug when taking it out. It may cause electric shock and damage. Turn off the main power switch when not using the unit for a long time. It may cause failure of product or fire.
- Do not place obstacles around air-inlets or inside of air-outlet. It may cause failure of appliance or accident. Do not place heavy object on the power cord and ensure that the cord is not compressed. There is danger of fire or electric shock. Don't drink water drained from air conditioner. It contains contaminants and could make you sick.
- Use caution when unpacking and installing. Sharp edges could cause injury.
- If water enters the unit, turn the unit of at the power outlet and switch of the circuit breaker. Isolate supply by taking the power-plug out and contact a qualified service technician.
- This appliance is not intended for use by persons (including children) with reduced physical ,sensory, or mental capabilities or lack of experience and knowledge, unless they have been given super vision or instruction concerning use of the appliance by a person responsible for their safety.
- Children should be supervised to ensure that they do not play with the appliance.
- If the supply cord is damaged, it must be replaced by MRCOOL®, its service agent or similarly-qualified persons in order to avoid a hazard.
- The appliance shall be installed in accordance with local and national wiring regulations.
- Installation must be performed in accordance with the requirement of NEC and CEC by authorized personnel only.
- Do not operate your system in a wet room such as a bathroom or laundry room.
- The appliance with electric heater shall have at least 1 meter space to the combustible materials.
- Contact the authorized service technician for repair or maintenance of this unit.
- Contact the authorized installer for installation of this unit.

WARNINGS

Electrical Information

The complete electrical rating of your new room air conditioner is stated on the serial plate. Refer to the rating when checking the electrical requirements.

- Be sure the air conditioner is properly grounded. To minimize shock and fire hazards, proper grounding is important. The power cord is equipped with a three-prong grounding plug for protection against shock hazards.
- Your air conditioner must be used in a properly grounded wall receptacle. If the wall receptacle you intend to use is not adequately grounded or protected by a time delay fuse or circuit breaker, have a qualified electrician install the proper receptacle. Ensure the receptacle is accessible after the unit installation.
- Do not run air conditioner without side protective cover in place. This could result in mechanical damage within the air conditioner.

Avoid fire hazard or electric shock. Do not use an extension cord or an adapter plug. Do not remove any prongs from the power cord.

For Your Safety

Do not store or use gasoline or other flammable vapors and liquids in the vicinity of this or any other appliance.

Prevent Accidents

To reduce the risk of fire, electrical shock, or injury to persons when using your air conditioner, follow basic precautions, including the following:

- Be sure the electrical service is adequate for the model you have chosen. This information can be found on the serial plate, which is located on the side of the cabinet and behind the grille.
- Be sure the air conditioner has been securely and correctly installed according to the installation instructions in this manual. Save this manual for possible future use in removing or installing this unit. When handling the air conditioner, be careful to avoid cuts from sharp metal fins on front and rear coils.

Electrical Requirements

Electrical Shock and Personal Injury Hazard
Electrical ground is required on this appliance.

WARNINGS CONT.

DO NOT ground to a gas line.
If cold water pipe is interrupted by plastic,non-metallic gaskets, or other insulating materials,
DO NOT use for grounding.
Check with a qualified electrician if you are in doubt as to whether the appliance is properly grounded.
DO NOT modify power supply cord plug.
If it does not fit outlet, have a proper outlet installed by a qualified electrician.
DO NOT have a fuse in the neutral or grounding circuit.
A fuse in the neutral, or grounding circuit could result in an electrical shock.
DO NOT use an extension cord with this appliance.
Failure to follow these instructions could result in electrical shock, serious injury, or death.
Observe all local governing codes and ordinances. Do not, under any circumstances, remove the power supply cord grounding prong.
NOTE: If codes permit, and a separate grounding wire is used; it is recommended that a qualified electrician determine that the grounding path is adequate and not interrupted by plastic, nonmetallic gaskets, or other insulating materials.
Receptacle Wiring
Receptacle wiring should be a minimum of 14 gauge. Use copper wire only. It is your responsibility to provide proper and adequate receptacle wiring, installed by a qualified electrician.
Electrical Requirements
A time delay fuse or time delay circuit breaker is also required. A separate circuit, serving only this appliance, MUST be provided.
NOTE: for details about the parameters of the electric heating function, see the nameplate on the unit.

WARNINGS FOR SERVICING

- Servicing shall only be performed as recommended by MRCOOL®. Maintenance and repair requiring the assistance of other skilled personnel shall be carried out under the supervision of the person competent in the use of flammable refrigerants.
- DO NOT modify the length of the power cord or use an extension cord to power the unit.
- DO NOT share a single outlet with other electrical appliances. Improper power supply can cause fire or electrical shock.
- Please follow the instruction carefully to handle, install, clear, service the appliance to avoid any damage or hazard.

Flammable R-32 is used within this appliance.

- When maintaining or disposing the appliance, the refrigerant (R32) shall be recovered properly, shall not discharge to air directly.
- Compliance with national gas regulations shall be observed.
- Keep ventilation openings clear of obstruction.
- The appliance shall be stored so as to prevent mechanical damage from occurring.
- A warning that the appliance shall be stored in a well-ventilated area where the room size corresponds to the room area as specified for operation.
- Any person who is involved with working on or breaking into a refrigerant circuit should hold a current valid certificate from an industry-accredited assessment authority, which authorizes their competence to handle refrigerants safely in accordance with an industry-recognized assessment specification. All training should follow the ANNEX HH requirements of UL 60335-2-40.

Examples for such working procedures are:

  - breaking into the refrigerating circuit;
  - opening of sealed components;
  - opening of ventilated enclosures.

- No any open fire or device like switch which may generate spark/arcing shall be around appliance to avoid causing ignition of the flammable refrigerant used. Please follow the instructions carefully when storing or maintaining the appliance to prevent mechanical damage from occurring.

WARNING FOR SERVICING CONT.

- Do not use means to accelerate the defrosting process or to clean, other than those recommended by MRCOOL®.
- The appliance shall be stored in a room without continuously operating ignition sources (ex. open flames, an operating gas appliance) and ignition sources (ex. an operating electric heater) or close to the appliance
- Do not pierce or burn.
- Be aware that the refrigerants may not contain an odor.

Transportation of Equipment Containing Flammable Refrigerants

- See transportation regulations.

Marking the Equipment Using Signs

- See local regulations.

Disposal of Equipment That Uses Flammable Refrigerant

- See national regulations.

Equipment Storage

- The storage of equipment should be in accordance with MRCOOL®'s instruction.

Storage of Packaged Equipment

- Storage package protection should be constructed such that mechanical damage to the equipment inside the package will not cause a leak of the refrigerant charge. The maximum number of pieces of equipment permitted to be stored together will be determined by local regulations.

Servicing Information

1. Checks to the area
   - Prior to beginning work on systems containing flammable refrigerants, safety checks are necessary to ensure that the risk of ignition is minimized. For repair to the refrigerating system, the following precautions shall be complied with prior to conducting work on the system.
2. Work procedure
   - Work should be undertaken under a controlled procedure as to minimize the risk of a flammable gas or vapor being present while the work is being performed.
3. General work area
   - All maintenance staff and others working in the local area shall be instructed on the nature of work being carried out. Work in confined spaces shall be avoided. The area around the workspace shall be sectioned of. Ensure that the conditions within the area have been made safe by control of flammable material.
4. Checking for the presence of refrigerant
   - The area shall be checked with an appropriate refrigerating detector prior to and during work, to ensure the technician is aware of potentially flammable atmospheres. Ensure that the leak-detection equipment being used is suitable for use with flammable refrigerants, i.e. non-sparking, adequately sealed, or intrinsically safe.
5. Presence of a fire extinguisher
   - If any hot work is to be conducted on the refrigeration equipment or any associated parts, appropriate fire extinguishing equipment shall be available to hand. Have a dry powder or CO2 fire extinguisher adjacent to the charging area.
6. No ignition sources
   - No person carrying out work in relation to a refrigerating system which involves exposing any pipework that contains or has contained flammable refrigerant shall use any sources of ignition in such a manner that it may lead to the risk of fire or explosion. All possible ignition sources, including cigarette smoking, should be kept sufficiently far away from the site of installation, repairing, removing and disposal, during which flammable refrigerant can possibly be released to the surrounding space. Prior to work taking place, the area around the equipment is to be surveyed to make sure that there are no flammable hazards or ignition risks. "No Smoking" signs shall be displayed.
7. Ventilated area
   - Ensure that the area is in the open or that it is adequately ventilated before breaking into the system or conducting any hot work. A degree of ventilation shall continue during the period that the work is carried out. The ventilation should safely disperse any released refrigerant and preferably expel it externally into the atmosphere.

WARNING FOR SERVICING CONT.

8. Check to the refrigerating equipment
   - Where electrical components are being changed, they shall be fit for the purpose and to the correct specifications. At all times MRCOOL®'s maintenance and service guidelines shall be followed. If in doubt consult MRCOOL®'s technical department for assistance. The following checks shall be applied to installations using flammable refrigerants: the actual refrigerant charge is in accordance with the room size within which the refrigerant containing parts are installed; the ventilation machinery and outlets are operating adequately and are not obstructed; if an indirect refrigerating circuit is being used, the secondary circuit shall be checked for the presence of refrigerant; marking to the equipment continues to be visible and legible markings and signs that are illegible shall be corrected; and refrigerating pipe or components are installed in a position where they are unlikely to be exposed to any substance which may corrode refrigerant containing components, unless the components are constructed of materials which are inherently resistant to being corroded or are suitably protected against being so corroded.
9. Checks to electrical devices
   - Repair and maintenance to electrical components shall include initial safety checks and component inspection procedures. If a fault exists that could compromise safety, then no electrical supply shall be connected to the circuit until it is satisfactorily dealt with. If the fault cannot be corrected immediately but it is necessary to continue operation, an adequate temporary solution shall be used. This shall be reported to the owner of the equipment so all parties are advised.
   - Initial safety checks shall include:
   - That capacitors are discharged: this shall be done in a safe manner to avoid possibility of sparking; that there are no live electrical components and wiring exposed while charging, recovering or purging the system; that there is continuity of earth bonding.

Repairs to Sealed Components

1. During repairs to sealed components, all electrical supplies shall be disconnected from the equipment being worked upon prior to any removal of sealed covers, etc. If it is absolutely necessary to have an electrical supply to equipment during servicing, then a permanently operating form of leak detection shall be located at the most critical point to warn of a potentially hazardous situation.
2. Particular attention shall be paid to the following to ensure that by working on electrical components, the casing is not altered in such a way that the level of protection is affected.
   - This shall include damage to cables, excessive number of connections, terminals not made to original specification, damage to seals, incorrect fitting of glands, etc.
   - Ensure that apparatus is mounted securely.
   - Ensure that seals or sealing materials have not degraded such that they no longer serve the purpose of preventing the ingress of flammable atmospheres. Replacement parts shall be in accordance with MRCOOL®'s specifications.

NOTE: The use of silicon sealant may inhibit the effectiveness of some types of leak detection equipment. Intrinsically safe components do not have to be isolated prior to working on them.

Repairs to Intrinsically-Safe Components

Do not apply any permanent inductive or capacitance loads to the circuit without ensuring that this will not exceed the permissible voltage and current permitted for the equipment in use. Intrinsically safe components are the only types that can be worked on while live in the presence of a flammable atmosphere. The test apparatus shall be at the correct rating. Replace components only with parts specified by MRCOOL®. Other parts may result in the ignition of refrigerant in the atmosphere from a leak.

Cabling

Check that cabling will not be subject to wear, corrosion, excessive pressure, vibration, sharp edges or any other adverse environmental effects. The check shall also take into account the effects of aging or continual vibration from sources such as compressors or fans.

Detection of Flammable Refrigerants

- Under no circumstances shall potential sources of ignition be used in the searching for or detection of refrigerant leaks. A halide torch (or any other detector using a naked flame) shall not be used.

WARNING FOR SERVICING CONT.

- The following leak detection methods are deemed acceptable for systems containing flammable refrigerants. Electronic leak detectors shall be used to detect flammable refrigerants, but the sensitivity may not be adequate, or may need recalibration. (Detection equipment shall be calibrated in a refrigerant-free area.) Ensure that the detector is not a potential source of ignition and is suitable for the refrigerant used. Leak detection equipment shall be set at a percentage of the LFL of the refrigerant and shall be calibrated to the refrigerant employed and the appropriate percentage of gas (25% maximum) is confirmed. Leak detection fluids are suitable for use with most refrigerants but the use of detergents containing chlorine shall be avoided as the chlorine may react with the refrigerant and corrode the copper pipework.
- If a leak is suspected, all naked flames shall be removed/ extinguished. If a leakage of refrigerant is found which requires brazing, all of the refrigerant shall be recovered from the system, or isolated (by means of shut of valves) in a part of the system remote from the leak. Removal of refrigerant shall be according to removal and evacuation.

Removal and Evacuation

When breaking into the refrigerant circuit to make repairs—or for any other purpose - conventional procedures shall be used. However, for flammable refrigerants it is important that best practice be followed, since flammability is a consideration. The following procedure should be adhered to:

a. safely remove refrigerant following local and national regulations;
b. purge the circuit with inert gas;
c. evacuate (optional for A2L);
d. purge with inert gas (optional for A2L);
e. open the circuit by cutting or brazing.

The refrigerant charge shall be recovered into the correct recovery cylinders if venting is not allowed by local and national codes. For appliances containing flammable refrigerants, the system shall be purged with oxygen-free nitrogen to render the appliance safe for flammable refrigerants. This process might need to be repeated several times. Compressed air or oxygen shall not be used for purging refrigerant systems. For appliances containing flammable refrigerants purging shall be achieved by breaking the vacuum in the system with oxygen-free nitrogen and continuing to fill until the working pressure is achieved, then venting to atmosphere, and finally pulling down to a vacuum (optional for A2L). This process shall be repeated until no refrigerant is within the system (optional for A2L). When the final oxygen-free nitrogen charge is used, the system shall be vented down to atmospheric pressure to enable work to take place. Ensure that the outlet for the vacuum pump is not close to any potential ignition sources and that ventilation is available.

Charging Procedures

In addition to conventional charging procedures, the following requirements shall be followed. Ensure that contamination of different refrigerants does not occur when using charging equipment. Hoses or lines shall be as short as possible to minimize the amount of refrigerant contained in them. Cylinders shall be kept in an appropriate position according to the instructions. Ensure that the refrigeration system is earthed prior to charging the system with refrigerant. Label the system when charging is complete (if not already). Extreme care shall be taken not to overfill the refrigeration system. Prior to recharging the system it shall be pressure tested with OFN. The system should be leak tested on completion of charging but prior to commissioning. A follow-up leak test should be carried out prior to leaving the site.

Decommissioning

Before carrying out this procedure, it is essential that the technician is completely familiar with the equipment and all its detail. It is recommended good practice that all refrigerants are recovered safely. Prior to the task being carried out, an oil and refrigerant sample shall be taken in case analysis is required prior to the reuse of reclaimed refrigerant. It is essential that electrical power is available before the task is commenced.

a. Become familiar with the equipment and its operation.
b. Isolate systems electrically.
c. Before attempting the procedure ensure that: Mechanical handling equipment is available, if required, for handling refrigerant cylinders;

All personal protective equipment is available and being used correctly; The recovery process is supervised at all times by a competent person; Recovery equipment and cylinders conform to the appropriate standards.

d. Pump down the refrigerant system, if possible.

WARNING FOR SERVICING CONT.

d. If a vacuum is not possible, make a manifold so that refrigerant can be removed from various parts of the system
e. Make sure that cylinder is situated on the scales before recovery takes place.
f. Start the recovery machine and operate in accordance with instructions.
g. Do not overfill cylinders. (No more than 80% volume liquid charge).
h. Do not exceed the maximum working pressure of the cylinder, even temporarily.
i. When the cylinders have been filled correctly and the process completed, make sure that the cylinders and the equipment are removed from site promptly and all isolation valves on the equipment are closed of.
j. Recovered refrigerant shall not be charged into another refrigeration system unless it has been cleaned and checked.

Labeling

Equipment shall be labeled stating that it has been decommissioned and emptied of refrigerant. The label should be date and signed.

Ensure that there are labels on the equipment stating it contains flammable refrigerant.

Recovery

- When removing refrigerant from a system, either for servicing or decommissioning, it is recommended good practice that all refrigerants are removed safely. When transferring refrigerant into cylinders, ensure that only appropriate refrigerant recovery cylinders are employed.
- Ensure that the correct number of cylinders for holding the total system charge is available. All cylinders to be used are designated for the recovered refrigerant and labeled for that refrigerant (i.e. special cylinders for the recovery of refrigerant). Cylinders shall be complete with pressure relief valve and associated shut-of valves in good working order. Empty recovery cylinders are evacuated and, if possible, cooled before recovery occurs.
- The recovery equipment shall be in good working order with a set of instructions concerning the equipment that is at hand and shall be suitable for the recovery of flammable refrigerants .In addition, a set of calibrated weighing scales shall be available and in good working order. Hoses shall be complete with leak-free disconnect couplings and in good condition. Before using the recovery machine, check that it is in satisfactory working order, has been properly maintained and that any associated electrical components are sealed to prevent ignition in the event of a refrigerant release. Consult MRCOOL® if in doubt. The recovered refrigerant shall be returned to the refrigerant supplier in the correct recovery cylinder, and the relevant Waste Transfer Note arranged.
- Do not mix refrigerants in recovery units and especially not in cylinders. If compressors or compressor oils are to be removed, ensure that they have been evacuated to an acceptable level to make certain that flammable refrigerant does not remain within the lubricant. The evacuation process shall be carried out prior to returning the compressor to the suppliers. Only electric heating to the compressor body shall be employed to accelerate this process. When oil is drained from a system, it shall be carried out safely.
- Non-duct connected appliances containing A2L refrigerants with the supply and return air openings in the conditioned space may have the body of the appliance may be installed in open areas such as false ceilings not being used as return air plenums, as long as the conditioned air does not directly communicate with the air of the false ceiling.

Symbols Displayed on the Unit		
	**WARNING**	This symbol shows that this appliance uses a flammable refrigerant. If the refrigerant is leaked and exposed to an external ignition source, there is a risk of fire.
	**CAUTION**	This symbol shows that the installation manual should be read carefully.
	**CAUTION**	This symbol shows that service personnel should be handling this equipment in reference to the installation manual.
	**CAUTION**	This symbol shows that information is available in the installation & owner's manual.

2 SYSTEM OVERVIEW

2.1 Model Reference

Unit Model	Capacity (BTU/h)	Power Supply
PTACI09335DW	9k	208/230V, 60Hz, 1Phase
PTACI12335DW	12k	
PTACI15335DW	15k	

2.2 Specification Table

Model			PTACI09335DW	PTACI12335DW	PTACI15335DW
Power supply (indoor)		V~, Ph-Hz	208/230-1-60	208/230-1-60	208/230-1-60
Starting current		A	16.3	16	16.3
Compressor	Model		PTACI09335DW	PTACI12335DW	PTACI12335DW
	Type		ROTARY	ROTARY	ROTARY
	Brand		GMCC	GMCC	GMCC
	Capacity	W	2305	3220	3220
	Input	W	598	813	813
	Rated current	A	4.15	4.9	4.9
	Refrigerant oil/ oil charge	ml	POE VG74 240±10	POE VG74 280	POE VG74 280
Indoor side fan motor(DC)	Model		ZXFP-32-8-25L	ZXFP-32-8-25L	ZXFP-32-8-25L
	Speed(r/min)(lo)	r/min	Cool 944/838/732 Heat 984/868/752	Cool 944/840/736 Heat 984/872/752	1096/984/880
	Insulation class		B	B	B
	Waterproofing class		IP20	IP20	IP20
Outdoor side fan motor	Model		ZKFN-53-10-1L	ZKFN-53-10-1L	ZKFN-53-10-1L
	Input	W	77	77	77
	Capacitor	uF	7	/	/
	Speed(r/min)(lo)	r/min	Cool 1030/930/820 Heat 1100/930/820	1100/930/820	1200/930/820
	Capacitor class		/	/	/
	Insulation class		B	B	B
Indoor air flow (Hi/Mi/Lo)		m3/h	570/475/390	580/500/405	686/601/510
		ft3/min	335.29/279.41/229.41	341.04/294.238.14	403.53/353.53/300
Indoor sound pressure level Hi/Mi/Lo		dB(A)	46/44/40	49/45/40	49/54/42
Outdoor side noise level(H)		dB(A)	63.5	65	67
Refrigerant type		Type	R32	R32	R32
		kg	0.65	0.9	0.9
		oz	22.93	31.75	31.75
Design pressure(145psin:1MPa)(U/H)		psi	300/580	300/580	300/580
Power wiring			12#x3	12#x3	12#x3
Plug type			LCDI(6-20P)	LCDI(6-20P)	LCDI(6-20P)
Control type			Electronic Control	Electronic Control	Electronic Control
Operation temp	indoor(cooling/heating)	°C	16-32/0-27	16-32/0-27	16-32/0-27
		°F	60.8-89.6/32-80.6	60.8-89.6/32-80.6	60.8-89.6/32-80.6
	outdoor(cooling/heating)	°C	0-50/-5-24	0-50/-5-24	0-50/-5-24
		°F	32-122/23-75.2	32-122/23-75.2	32-122/23-75.2
Dimension(W*D*H)		mm	1067x532x406	1067x532x406	1067x532x406
		in	42.0x20.9x15.9	42.0x20.9x15.9	42.0x20.9x15.9
Packing (W*D*H)		mm	1120x620x490	1120x620x490	1120x620x490
		in	44.1x24.4x19.3	44.1x24.4x19.3	44.1x24.4x19.3
Net/Gross weight		kg	42.4/46.3	44.8/48.7	44.8/48.7
		lb	93.48/102.07	98.77/107.37	98.77/107.36
Qty per 20' /40' /40'HQ		Pieces	72/152/190	72/152/190	72/152/190

Notes:

1. Capacities are based on the following conditions:

Cooling:
Indoor Temperature: 80°F (26.7°C) DB/ 67°F (19.4°C) WB
Outdoor Temperature: 95°F (35°C) DB/ 75°F (23.9°C) WB

Heating:
Indoor Temperature: 70°F (21.1°C) DB/ 60°F (15.6°C) WB
Outdoor Temperature: 47°F (8.3°C) DB/ 43°F (6.1°C) WB

2. Capacities are net capacities.
3. Due to our policy of innovation, some specification may change without notification.

2.3 Unit Components

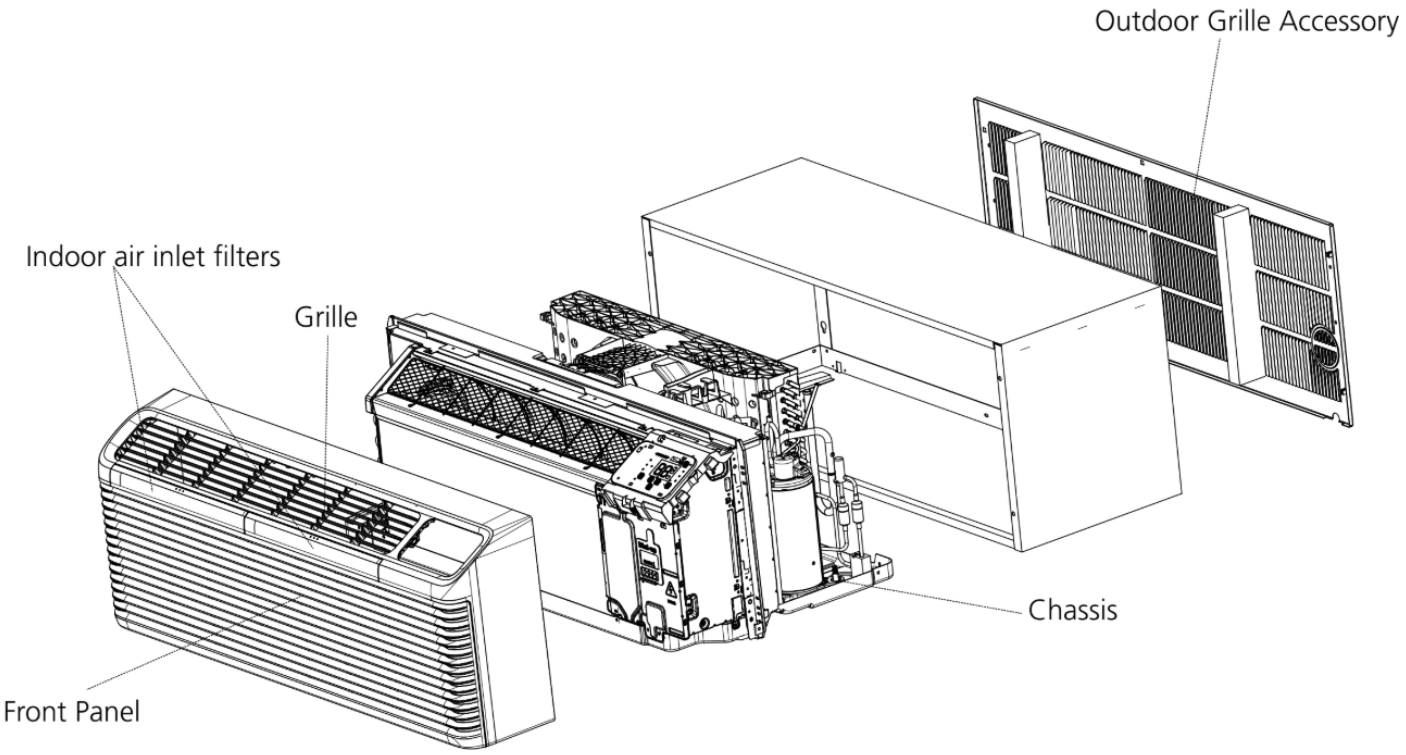

2.4 Dimensions

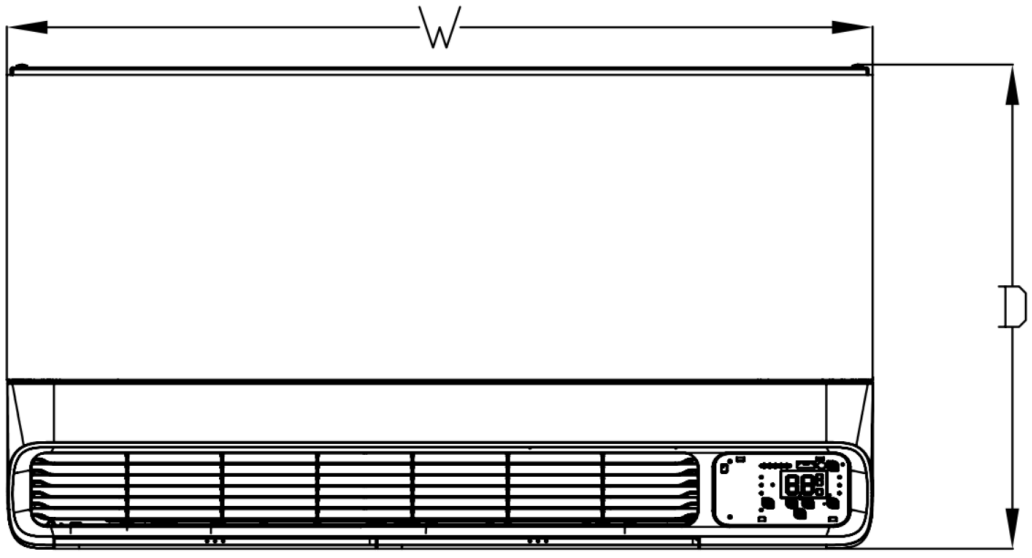

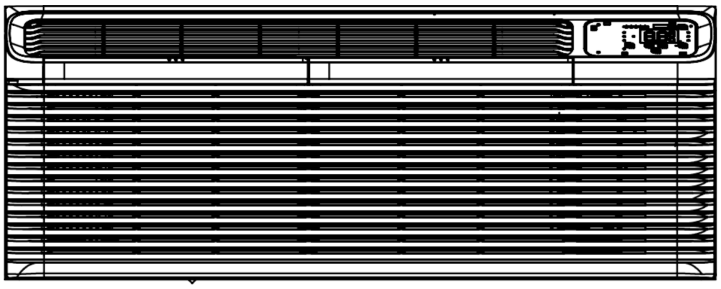

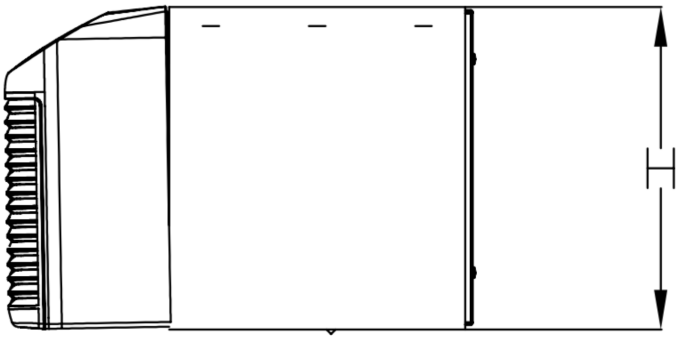

Dimensions	WxHxD (in)
	WxHxD (mm)
PTACI09335DW PTACI12335DW PTACI15335DW	1067x406x532
	42x15.9x20.9

2.5 Refrigerant Cycle Diagram

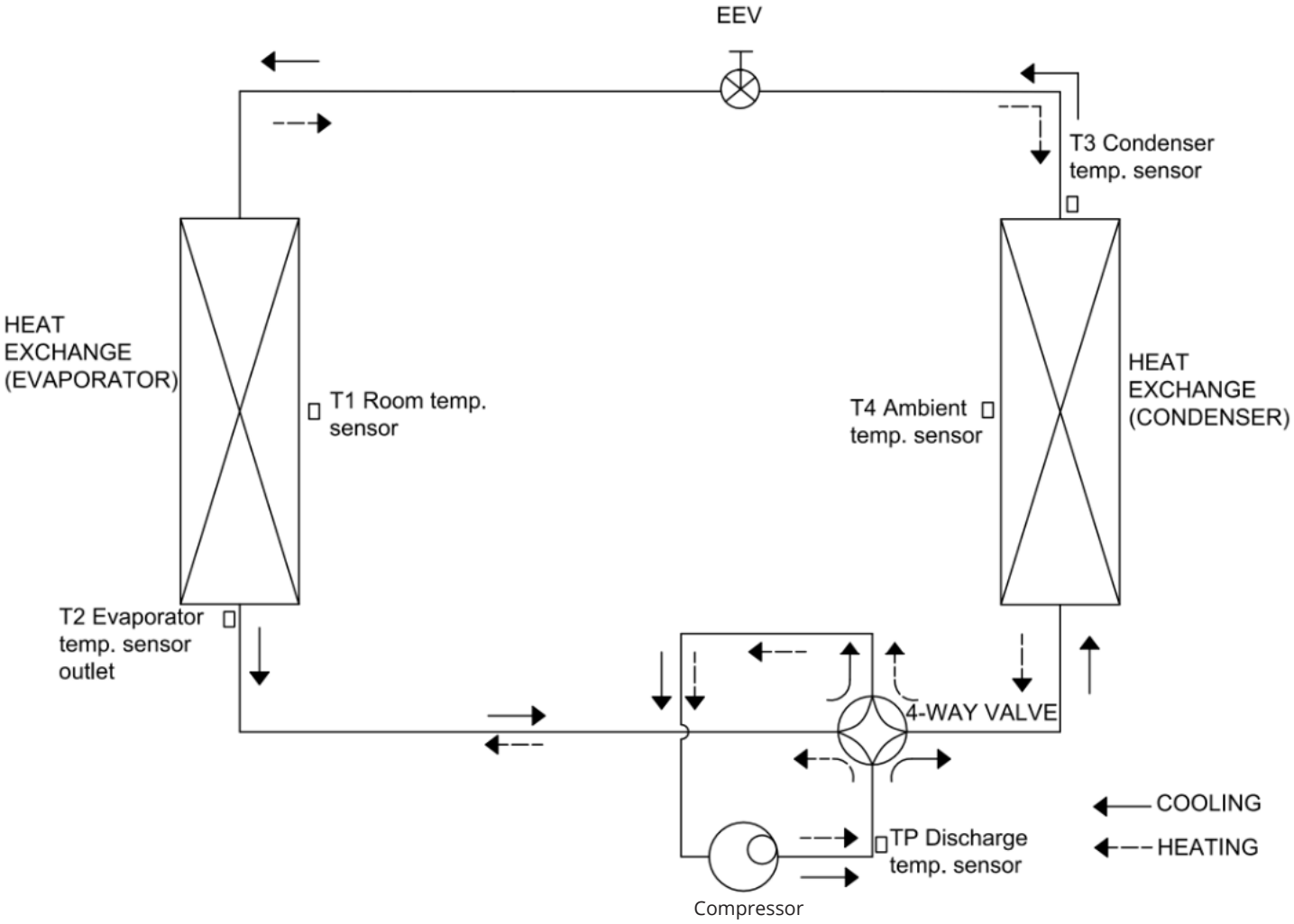

2.7 Electrical Wiring Diagrams

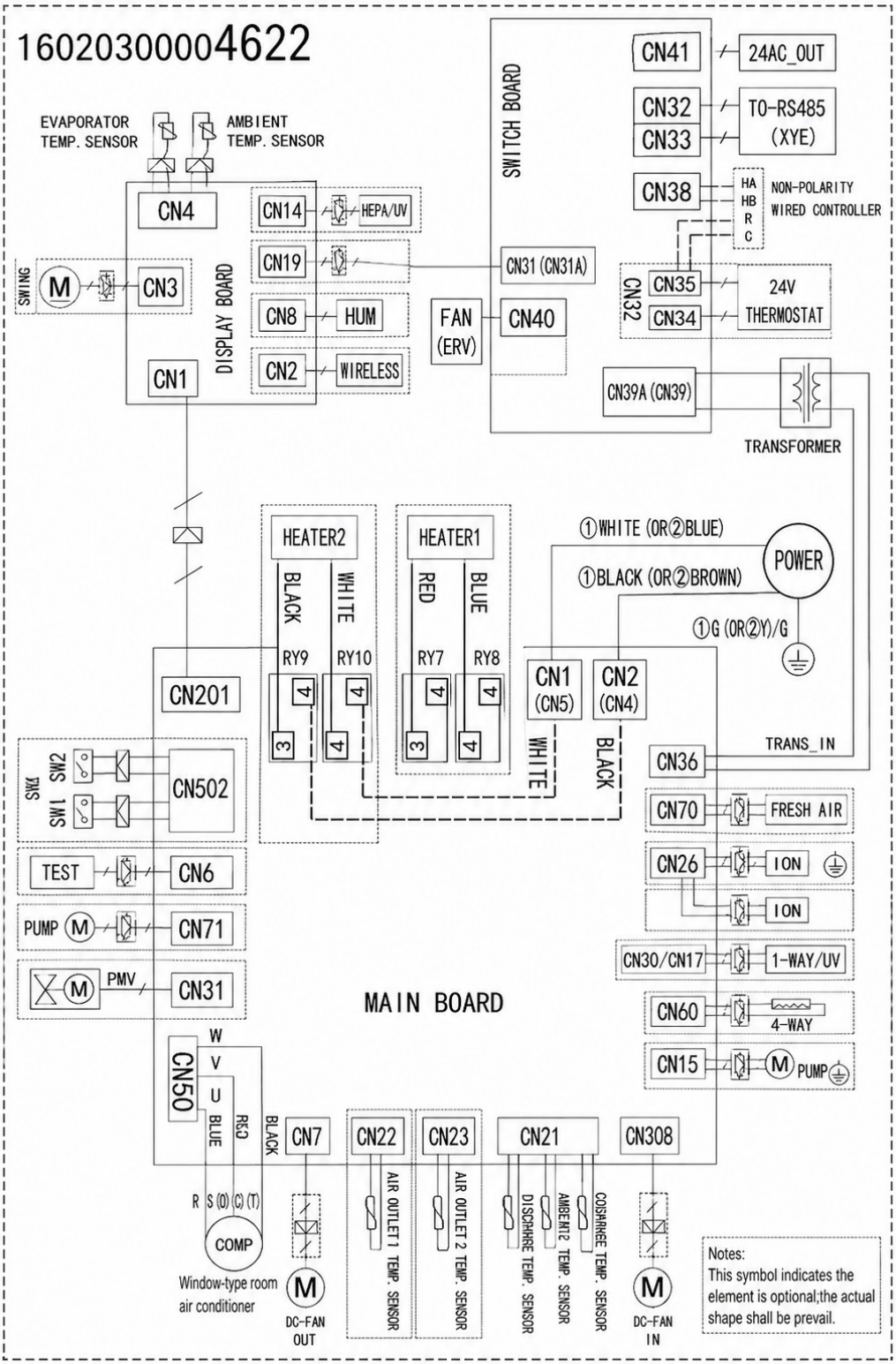

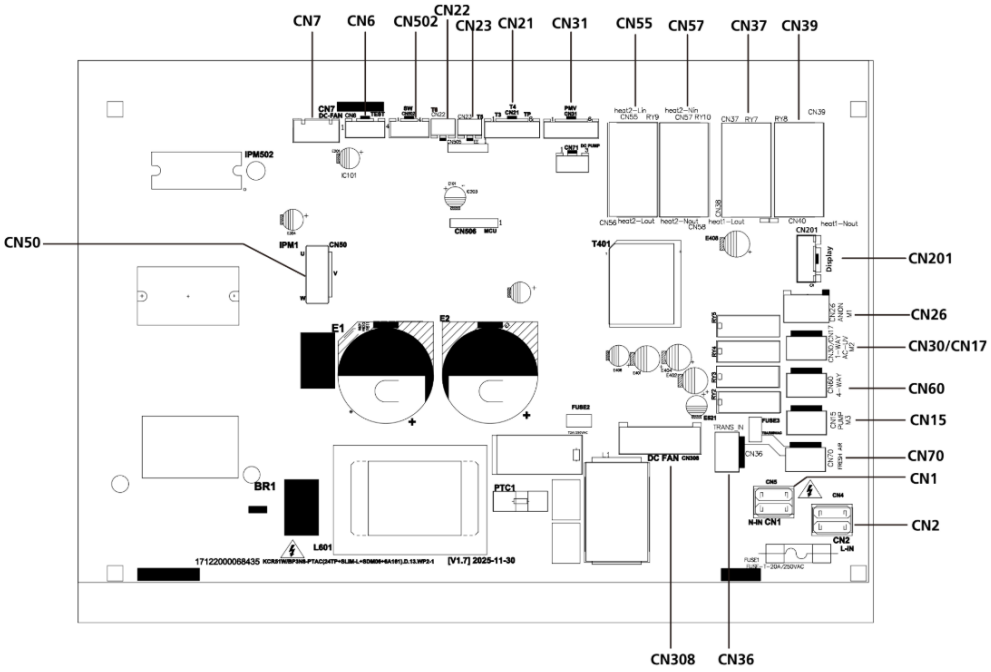

Name	CN#	Meaning
UVW	CN50	Connect to compressor (Output: 0-310V AC)
DC - Fan Out	CN7	Connect to DC fan
TESTPORT	CN6	Used for testing
T6	CN22	Connect to discharge temp. sensor T6 (Output: 5V DC)
T5	CN23	Connect to discharge temp. sensor T5 (Output: 5V DC)
T3 T4 TP	CN21	Connect to pipe temp. sensor T3, ambient temp. sensor T4 and discharge temp. sensor TP (Output: 5V DC)
PMV	CN31	Connect to electric expansion valve (Output:12V DC)
HEAT2	CN55, CN56	Connect to heat2 L-line
	CN57, CN58	Connect to heat2 N-line
HEAT1	CN37, CN38	Connect to heat1 L-line
	CN39, CN40	Connect to heat1 N-line

Name	CN#	Meaning
Display	CN201	Connect to display board CN1
ANION	CN26	Connect to negative-ion generator (Output:208-230V AC)
1-Way/AC-UV	CN30/CN17	Connect to one-way valve or UV
4-Way	CN60	Connect to four way valve (Output:208-230V AC)
PUMP	CN15	Connect to drain pump
Fresh-Air	CN70	Connect to fresh air
Power Supply	CN1	N_in: Connect to N-line (208-230V AC input)
	CN2	L_in: Connect to L-line (208-230V AC input)
Trans In	CN36	Connect to transformer (208-230V AC input)
DC FAN IN	CN308	Connect to indoor fan (Output:310V DC)

Note: This section is for reference only. Please take practicality as standard.

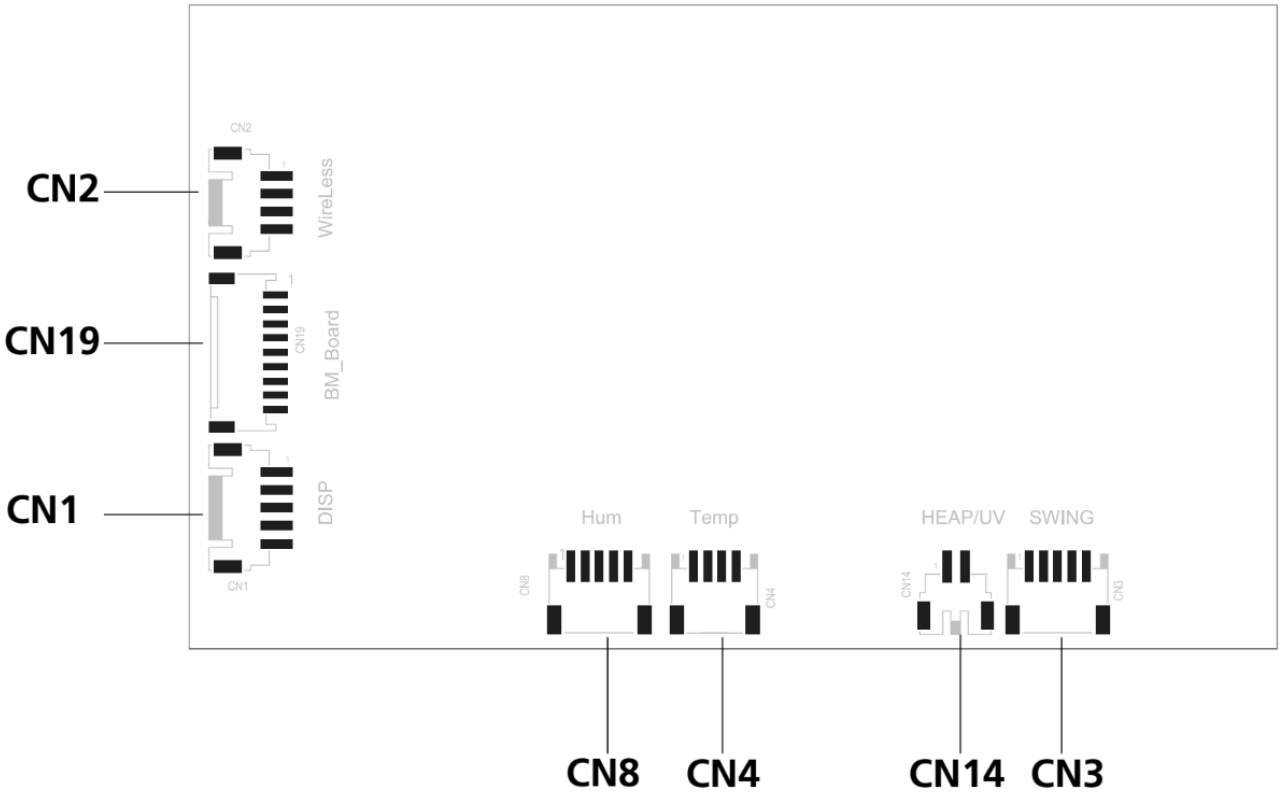

Name	CN#	Meaning
Wireless	CN2	Connect to a wireless network
BM_Board	CN19	Connect to 24V board CN31
DISP	CN1	Connect to main control board CN201(Output: 5V DC)
Hum	CN8	Connect to humidifier sensor (Output: 5V DC)
Temp	CN4	Connect to indoor ambient temperature sensor T1, indoor coil temperature sensor T2(Output: 5V DC)
HEAP/UV	CN14	Connect to HEAP or UV
Swing	CN3	Connect to swing motor (Output: 12V DC)

Note: This section is for reference only. Please take practicality as standard.

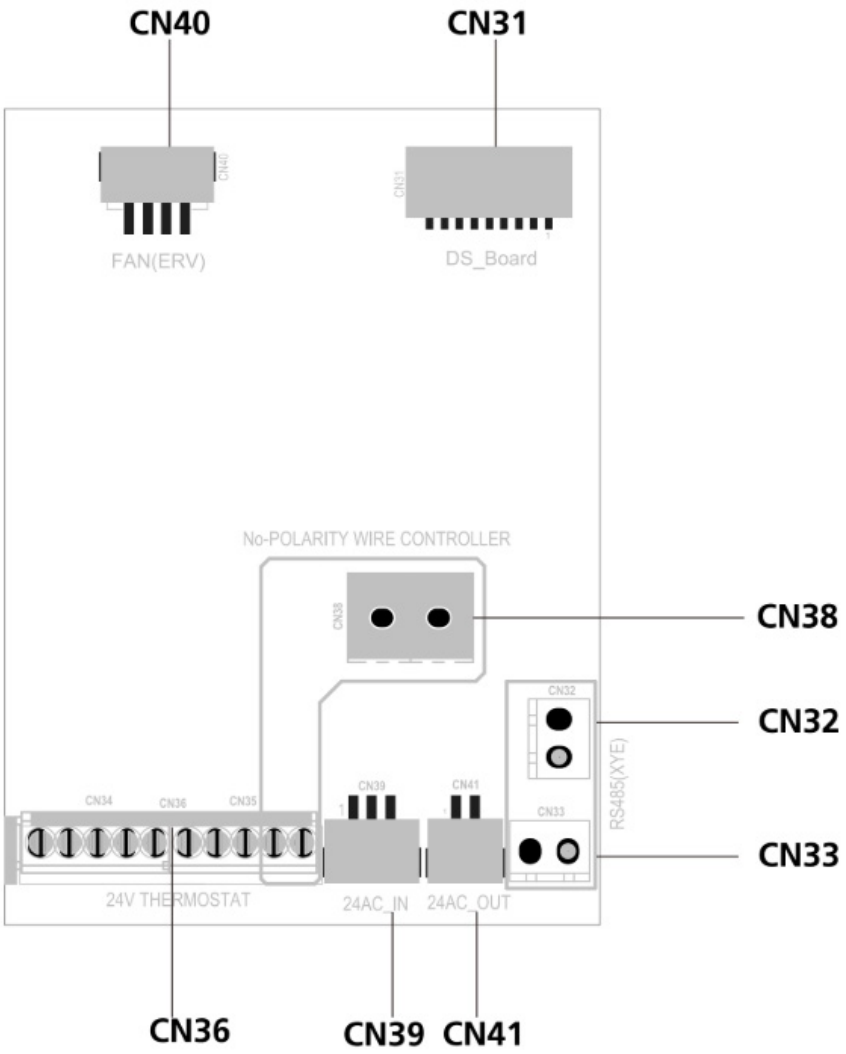

Name	CN#		Meaning
FAN_ERV	CN40		Connect to ERV fan
DS_Board	CN31		Connect to display board
Non-polarity wired controller	CN38		Connect to main control board CN201(Output: 5V DC)
RS485 (XYE)	CN32		Connect toRS485 communication (Output: 12V or 5V DC)
	CN33		
24V Thermostat	CN36	CN34	Connect to 24V thermostat
		CN35	
24V AC IN	CN39		Connect to transformer (24V AC input)
24V AC OUT	CN41		Connect to general wall pad (Output: 24V AC)

Note: This section is for reference only. Please take practicality as standard.

3 INSTALLATION

3.1 Packing List

This system comes with the following accessories. Use all of the installation parts and accessories to install the unit. Improper installation may result in water leakage, electrical shock and fire, or equipment failure.

PART	LOOKS LIKE	QUANTITY
Manuals		1 (Installation)
Unit	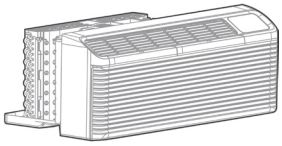	1
Sealing Sponge A	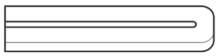	1
Sealing Sponge B		2
Screws		4 (For installing the wall sleeve)
Cable		1 (Optional)

The items that are not included with the unit and must be purchased separately.

PART	LOOKS LIKE	QUANTITY
Wall Sleeve	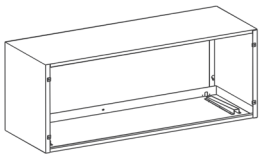	1

3.2 Installation Overview

Note: Illustrations in this manual are for explanatory purposes. The shape of your actual unit may be slightly different.

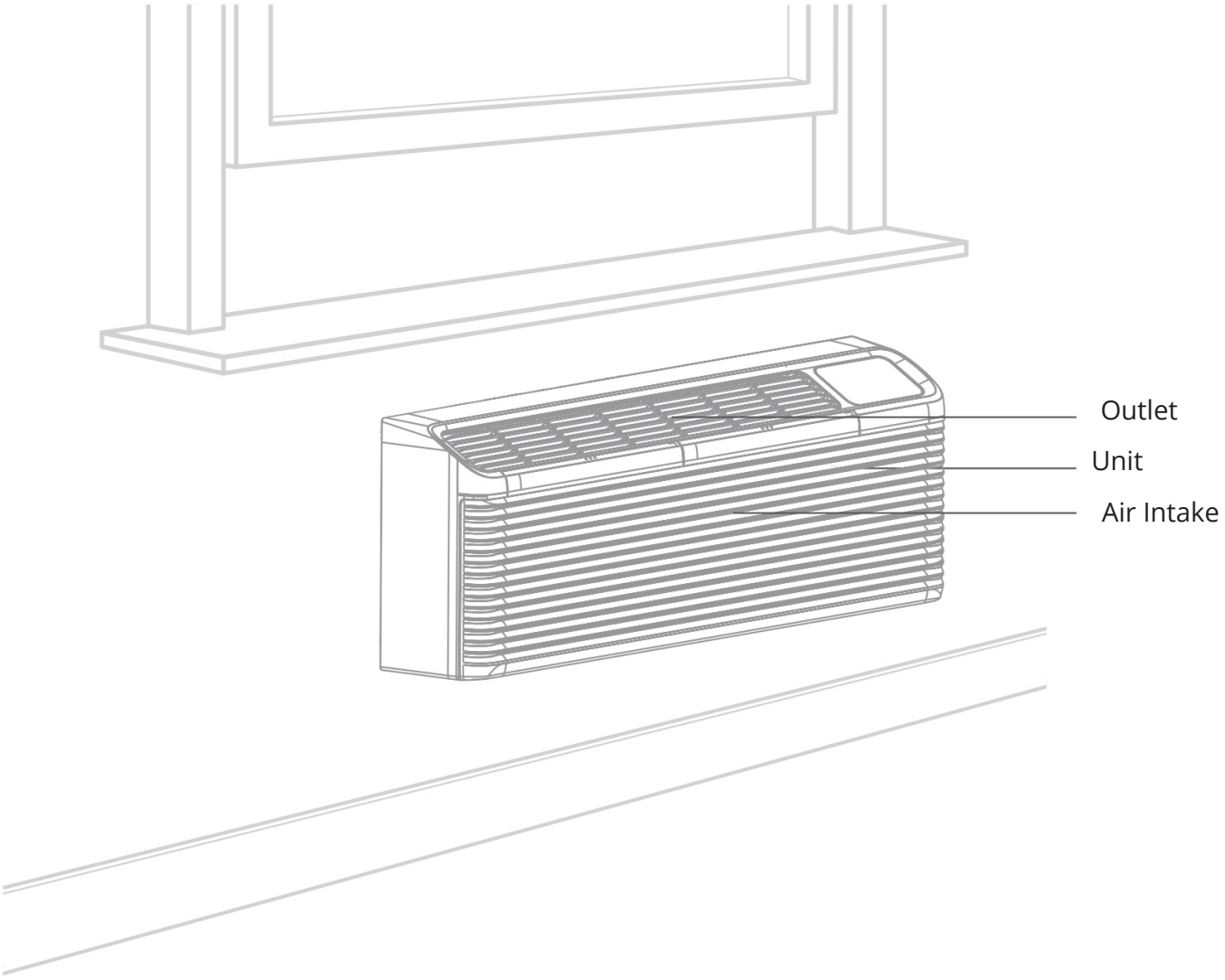

Tools NOT Included:


Gloves


Screwdriver


Pencil


Drill

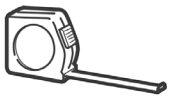
Ruler or Tape Measure


Level

3.3 Installation Location

CAUTION

- Be aware of sharp edges that can cause serious cuts.
- Use assistance when lifting the unit as it is heavy.

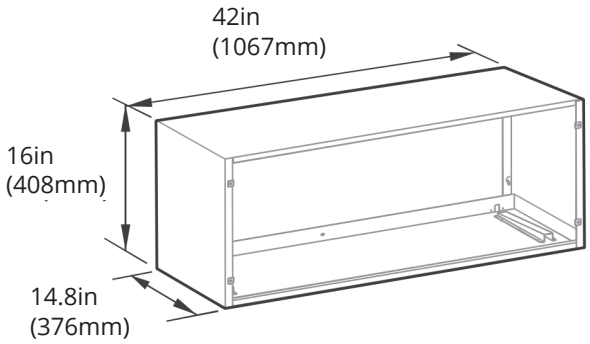

Wall sleeve size requirements (wall hole size should refer to the wall sleeve size)

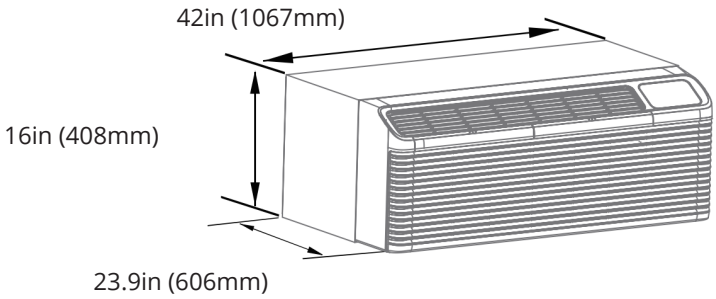

Product Size

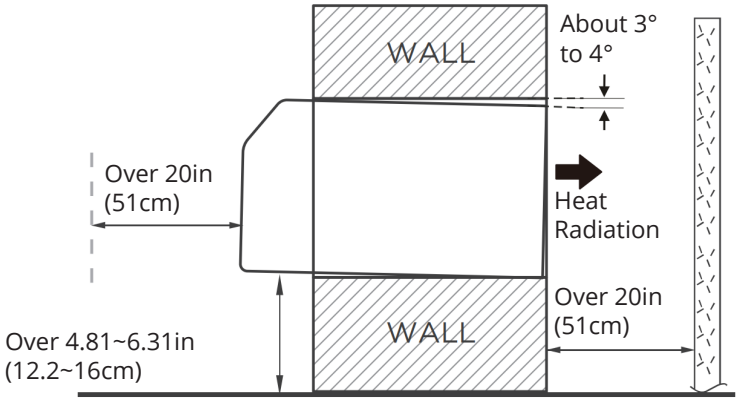

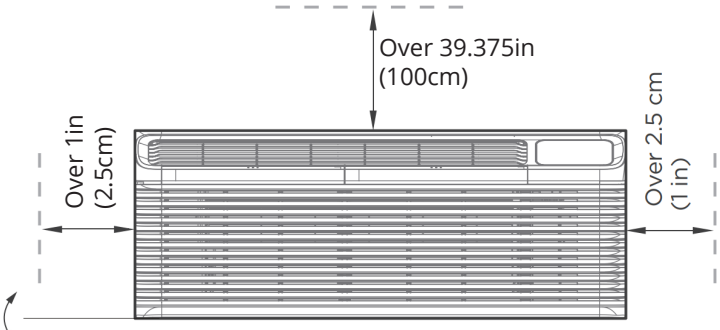

As level as possible
(Tilted angle should be smaller than 1°).

NOTE

- If using an existing wall sleeve, measure the wall sleeve dimensions before installation to ensure a good fit.
- Install the new unit according to this installation manual to achieve the best performance.
- All wall sleeves used in mounting the new unit must be in good structural condition and have a rear grille that securely attaches to the sleeve or the flange of the sleeve to secure the new unit.
- To avoid vibration and noise, make sure the unit is installed securely and firmly.
- When installing the sleeve, make sure there are no obstacles within 20 in (51 cm) to the backside of the unit that would interfere with heat radiation and exhaust air flow.
- To make sure the unit is efficient, do not place a barrier in the air outlet.

3.4 Installation Step-by-Step

Step 1: Attach Sponge A to the Wall Sleeve

- If using an old wall sleeve, the sponge on the wall sleeve must be replaced. First, remove the old sponge from the sleeve and attach Sponge A from the accessories list. (See Fig. 3-1.)
- If using a new wall sleeve, simply attach Sponge A. (See Fig. 3-1.)

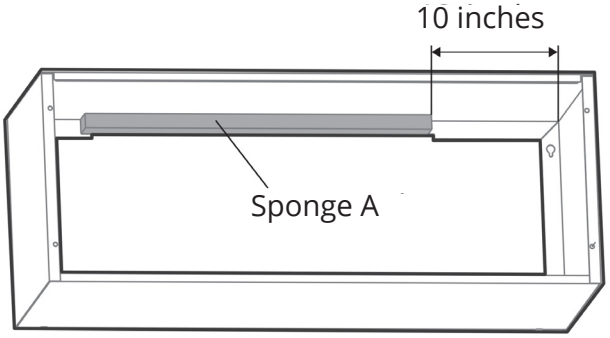

Fig. 3-1

Step 2: Attach the Wall Sleeve

- To avoid vibrations and noise, make sure the wall sleeve is installed securely and firmly. (See Fig. 3-2.)

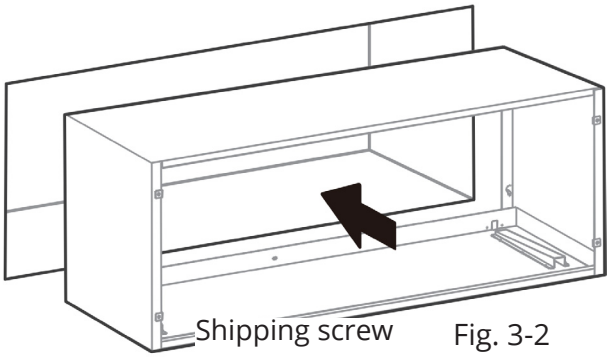

Fig. 3-2

Step 3: Remove the Front Panel

1. Pull out at the bottom to release the panel from the tabs.
2. Lift the front panel up. (See Fig. 3-3.)

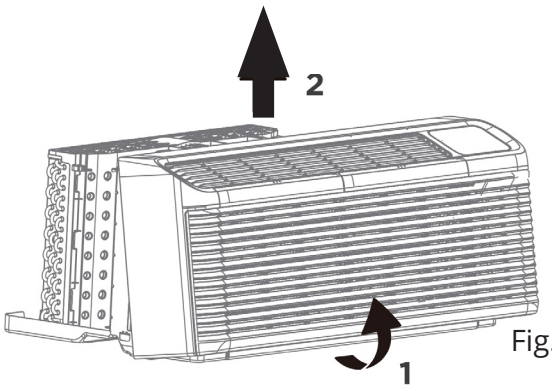

Fig. 3-3

Step 4: Open and Close the Vent Door (If Required)

- Remove the 2 shipping screws and the metal cover plate to open the vent door. (See Fig. 3-4.)
- Reinstall the metal cover plate to close the vent doors.

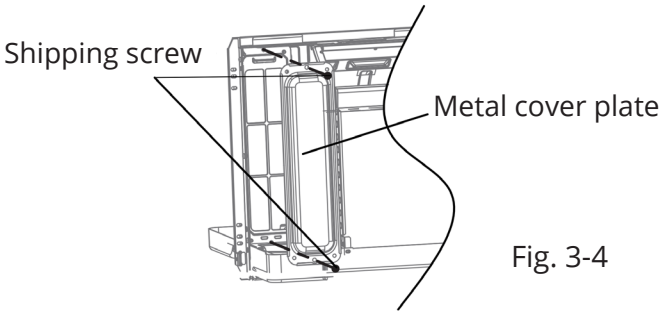

Fig. 3-4

NOTE

- The metal cover plate should be properly stored when removed. It needs to be reinstalled to close the vent door.
- When the metal cover plate is removed, some outdoor air will be drawn into the room. This will reduce heating or cooling efficiency.

Step 5: Attach Sponge B to the Rear Panel

- If using an old rear grille, remove the sponge from the rear grille, then attach Sponge B to the unit's rear panel. (See Fig. 3-5.)
- If using a new rear grille, do not attach a sponge to the rear grille: attach Sponge B to the machine's rear panel. (See Fig. 3-5.)

Align the two sponge strips with the left and right edges of the rear panel, then adhere them.

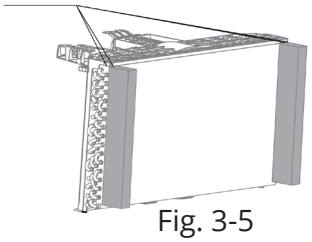

Fig. 3-5

Step 6: Install the Unit

- Lift the unit level and slide into the wall sleeve until it is firmly against the front of the wall sleeve. Secure with 4 screws and washers (supplied in the sleeve assembly) through the unit's flange holes. (See Fig. 3-6 and Fig. 3-7.)

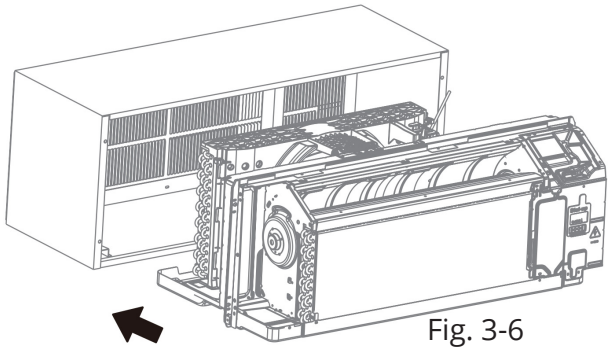

Fig. 3-6

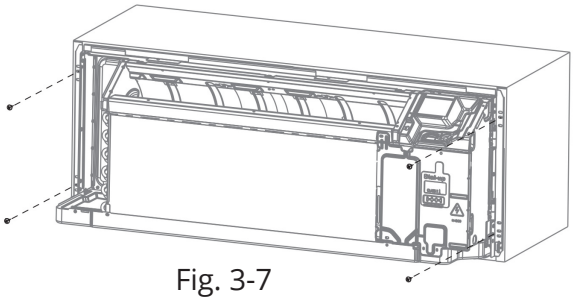

Fig. 3-7

Step 7: Install the Unit

1. Place tabs over the top rail.
2. Push inward at the bottom until the panel snaps into place. (See Fig. 3-8.)

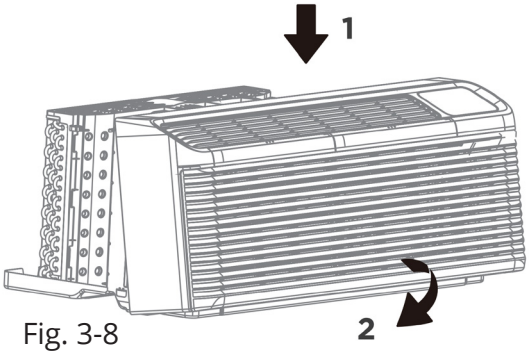

Fig. 3-8

! CAUTION

- Do not place obstacles around the air inlet or outlet of the unit.
- Always insert the filter securely and clean the filter ever 1-3 months as required.

4.1 Display Functions

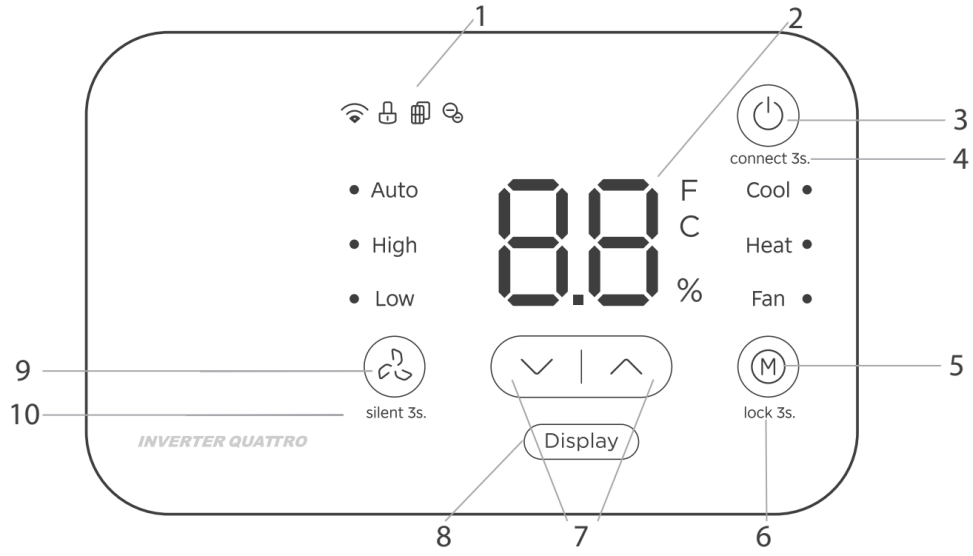

	Description	
1	Lock Icon	Icon indicates the panel lock has been turned on.
	Check Filter Icon	Icon indicates the air filter needs to be cleaned.
	Connect Icon (optional)	Icon indicates the wireless module has been activated.
	Negative Ion Icon (optional)	Icon indicates the negative ion function has been activated.
2	Display	• Shows the set temperature in °F/°C. While in Fan Only mode, it shows the room temperature. • Control code (on some models) • LC - Pads on the control panel is not available. The unit can be set by using wired controller only. • FC - Pads on the control panel and wired controller are not available. The unit can be set by using FRONT DESK CONTROL only. Error Codes: • The unit may stop operation due to a malfunction with the unit. If this occurs, an error code may appear on the display like below. Wait 10 minutes as the problem may resolve itself. If not, disconnect the power, then connect it again. Turn the unit on. If the problem persists, disconnect the power and contact customer service. Error codes appear and begin with the letters as noted below in the window display of the indoor unit: EH(xx), EL(xx), EC(xx), PH(xx), PL(xx), PC(xx).
3	Power Function	Press the power button to turn the unit on/off.
4	Wireless Connection (optional) connect 3s	Keep pressing the power button for three seconds to activated wireless connectivity.

		Description
5	Mode Function (M)	• Push this button to cycle through the Cool>Heat>Fan>Cool modes. The indicator light beside the "mode" option will illuminate. To Operate in Cool Mode: • Select cool mode to set the cooling function. • Use the up (^) or down (v) buttons to choose your desired temperature. • When cool mode is selected, the fan speed can be adjusted by pressing the fan button. To Operate in Fan Only Mode: • When using this function, the display will show the actual room temperature, not the set temperature. In fan only mode, the set temperature cannot be adjusted. To Operate in Heat Mode: • Choose heat mode to select the heating function. Use the up/down buttons to choose your desired temperature. When heating mode is chosen, the fan speed can be adjusted by pressing the fan button. NOTE: The reverse cycle and electric heater cannot run at the same time. In these cases, is normal that the reverse cycle will not operate. NOTE: If the unit has a DIP Switch feature, the temperature range is controlled by the DIP Switch. See the DIP Switch Configurations for details.
6	Panel Locking Function (M) lock 3s	• Pressing the mode button for 3 seconds will turn the lock panel function on/off. The remote control still works. The panel-locking indicator turns on when you lock the control panel. • NOTE: When the control panel is locked, pressing any other keys will make the panel-locking indicator flash for 3 seconds.
7	Up and Down Buttons	• Push the up/down buttons to increase/decrease the set temperature of the unit when in cooling or heating mode. The temperature can be set by increments of 1°F (1°C) and will appear on the display. • NOTE: When the machine is turned on, press and hold up/down buttons simultaneously for 3 seconds. This will toggle the display between°F &°C.
8	Display Button Display	• Press the display button to turn the LED display on/off. • Pressing the display button for 3 seconds will reset the "clean filter" indicator. This feature is a reminder to clean the air filter and will illuminate after 250 hours of operation.
9	Fan Speed Function	Every time you push this button, the fan speed cycles through the Auto>High>Low>Auto settings.
10	Silent Function (optional) silent 3s.	Press the fan button for 3 seconds to turn the silent function on/off. The fan will run in the silent setting.

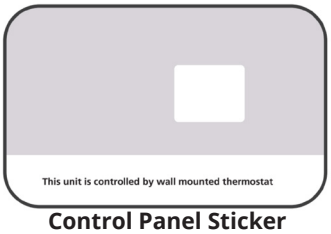

Control Panel Sticker

NOTE: When the unit displays "LC", the pads on the control panel are not available. The unit can be set up using the wired controller only. You can install the accessory on the control panel.
NOTE: For some models, there is a corresponding operation that happens 3 seconds after pressing any button
NOTE: When there are differences between the Installation and Remote Controller Manual regarding function description, the description in the Installation Manual should prevail.

4.2 Safety Features

Compressor Three-Minute Delay at Restart
The compressor must wait 3 minutes before starting each time.
Automatic Shutoff Based on the Discharge Temperature
If the compressor discharge temperature exceeds a certain level for a period of time, the compressor ceases operation.
Automatic Shutoff Based on the Fan Speed
If the indoor fan speed registers below 80RPM or over 2400RPM for an extended period of time, the unit ceases operation and the LED displays the fault information, and the fault is canceled after 30 seconds, and the fault is no longer canceled if there are 6 faults in a row and the protection interval between each time is less than 500 seconds. It can only be restored when the power is switched on or off or powered back on.
Inverter Module Protection
The inverter module has an automatic shutoff mechanism based on the unit's current, voltage, and temperature.
If automatic shutoff is initiated, the corresponding error code is displayed on the indoor unit and the unit ceases operation.
Indoor Fan Delayed Operation

- When the unit starts, the louver is automatically activated and the indoor fan will operate after a period of setting time.
- If the unit is in heating mode, the indoor fan is regulated by the anti-cold air function.

Sensor Redundancy and Automatic Shutoff

- If one temperature sensor malfunctions, the air conditioner continues operation and displays the corresponding error code, allowing for emergency use.
- When more than one temperature sensor is malfunctioning, the air conditioner ceases operation.

4.3 Basic Functions

Abbreviation	Element
T1	Indoor room temperature
T2	Coil temperature of evaporator
T3	Coil temperature of condenser
T4	Outdoor ambient temperature
Tsc	Adjusted setting temperature
TP	Compressor discharge temperature
DAHT	Temperature of discharge (T5)
DAHT	ETemperature of discharge (T6)
TCDE1	Exit defrost temperature 1
TCDE2	Exit defrost temperature 2 (maintain for a period of time
TIMING_DEFROST_TIME	Enter defrost time

Elements such as TCDE1, TCDE2, TIMING_DEFROST_TIME...etc. are well-setting a parameter of EEPROM.

Fan Mode:

When fan mode is activated:

- The outdoor fan and compressor cease operation.
- Temperature control is disabled and indoor room temperature is displayed.
- The indoor fan speed can be set to high, low, silent or auto.
- The louver operations are identical to those in cooling mode.
- Auto fan: In fan-only mode, AC operates the same as auto fan in cooling mode with the temperature set at
- 24°C.(Ts =24°C).

Cooling Mode:

Compressor Control

Read the configured temperature:

1. When the compressor runs continuously within a 120-minute period.
- If the following conditions are satisfied, the compressor ceases operation.
  - Calculated frequency (fb) is less than the minimum limit frequency (FminC).
  - Compressor runs at FminC for more than 10 minutes.
  - T1 is lower than or equal to (Tsc-2.5°C).
2. When the compressor runs continuously for more than 120 minutes.
- If the following conditions are satisfied, the compressor ceases operation.
  - Calculated frequency (fb) is less than the minimum limit frequency (FminC).
  - Compressor runs at FminC for more than 10 minutes.
  - T1 is lower than or equal to (Tsc-2.5°C)
3. When the protection delay is not reached, the compressors cannot be shut down even if the shutdown conditions are met, but the compressor keeps running at the lowest frequency (FminC). If one of the following conditions are satisfied, the time delay has not been met.
  - Compressor running frequency (fr) is more than test frequency (TestFre).
  - Compressor running frequency is equal to test frequency, T4 is more than 15°C or T4 fault.
  - Change setting temperature.
  - Turn turbo or sleep feature on/off.
  - Various frequency limit shutdown occurs.

Indoor Fan Control

1. In cooling mode, the indoor fan operates continuously. The indoor fan speed can be set to high, low, silent, or auto.
2. Auto fan.

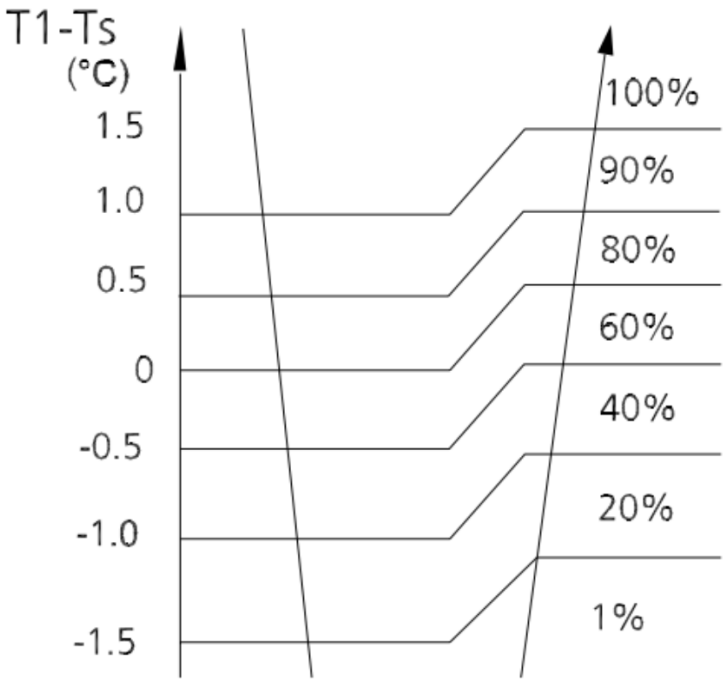

Outdoor Fan Control

- The outdoor unit will be run at a different speed according to T4 and compressor running frequency.
- For different outdoor units, the fan speeds are different.

Condenser Temperature Protection

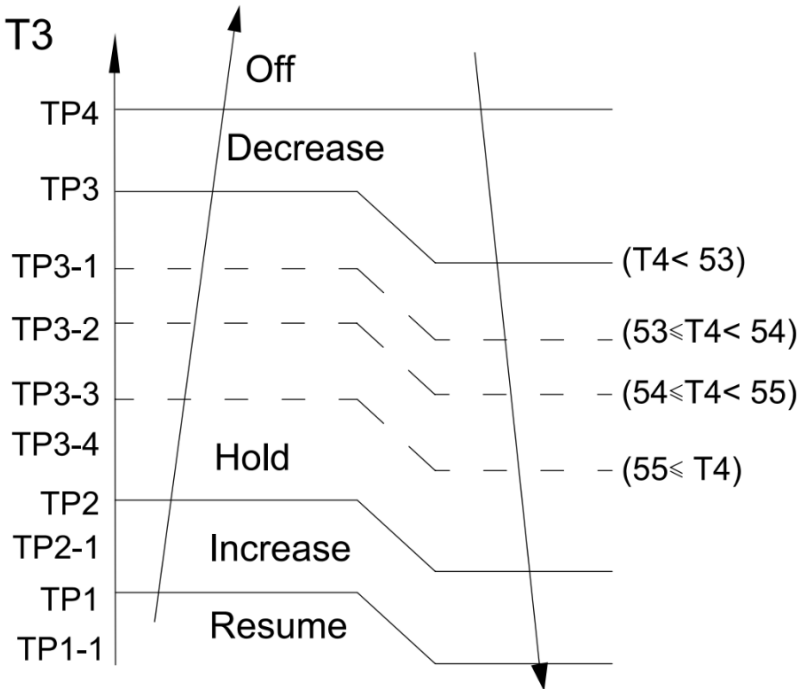

- Off: Compressor stops.
- Decrease: Lessen the running frequency at 1Hz/s.
- Hold: Keep the current frequency.
- Increase: Raise the running frequency at 0.04 Hz/s.
- Resume: No limitation for frequency.

Evaporator Temperature Protection

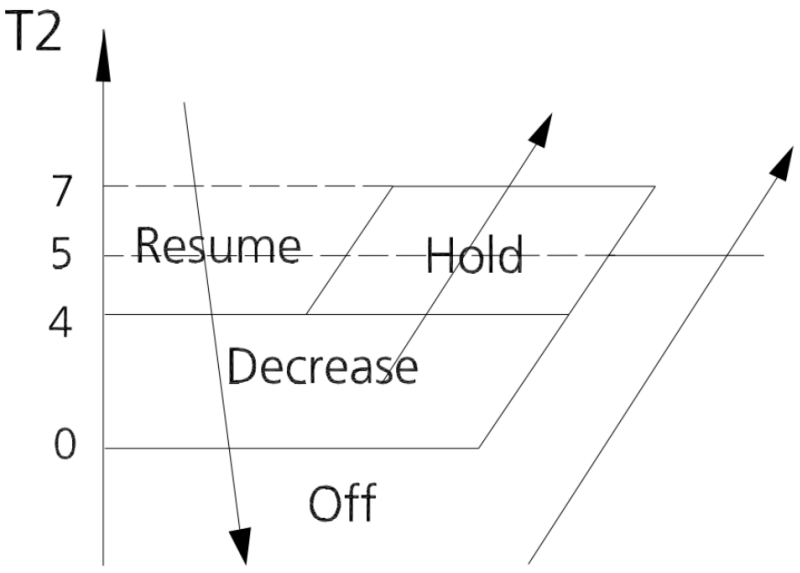

- Off: Compressor stops.
- Decrease: Lessen the running frequency to the lower level for 1 minute.
- Hold: Keep the current frequency.
- Resume: No limitation for frequency.

Heating Mode:

Compressor Control

1. Reach the configured temperature

- If the following conditions are satisfied, the compressor ceases operation.
  - Calculated frequency (fb) is less than the minimum limit frequency (FminC).
  - Compressor runs at FminC for more than 10 minutes.
  - T1 is higher than or equal to Tsc+2°C.
- When the protection delay is not reached, the compressor cannot be shut down even if the shutdown conditions are met, but the compressor is kept running at the lowest frequency (FminH). If one of the following conditions is satisfied, the time delay has not been met.
  - Compressor running frequency (fr) is more than test frequency (TestFre).
  - Change the setting temperature.
  - Turn turbo and sleep feature on/off.

2. When the current is higher than the predefined safe value, surge protection is activated, causing the compressor to cease operations.

Indoor Fan Control

1. In heating mode, the indoor fan operates continuously. The indoor fan speed can be set to high, low, silent, or auto. The anti-cold air function has the priority.

- Anti-cold air function.
  - The indoor fan is controlled by the indoor unit coil temperature T2.

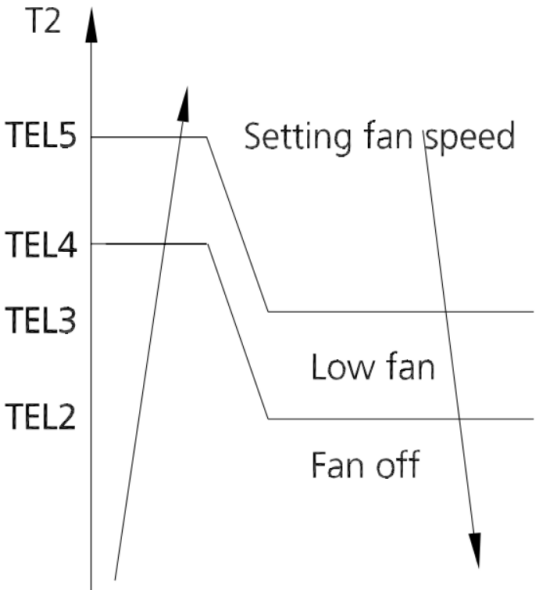

2. Auto fan:

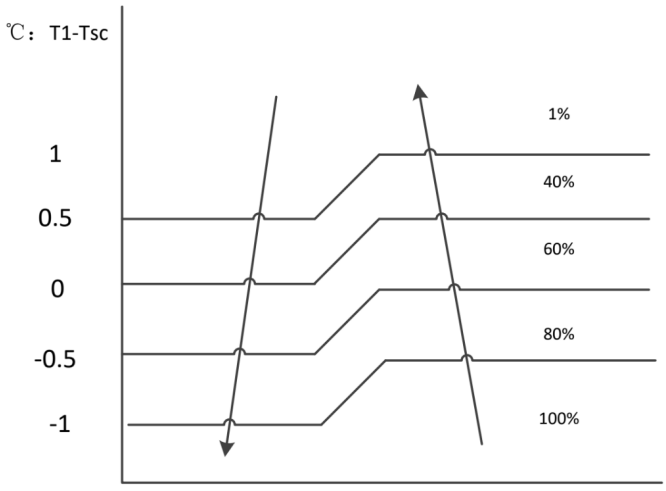

Outdoor Fan Control

- The outdoor unit will be run at a different speed according to T4 and compressor running frequency.
- For different outdoor units, the fan speeds are different.

Defrosting Mode

- The unit enters defrosting mode according to changes in the temperature value of T3, T4 as well as the compressor running time.
- In defrosting mode, the compressor continues to run, the indoor and outdoor motor will cease operation.
- If any one of the following conditions is satisfied, defrosting ends and the machine switches to normal heating mode:
  - T3 rises above TCDE1°C.
  - T3 maintained above TCDE2°C for 80 seconds.
  - Unit runs for 15 minutes consecutively in defrost mode.
- If T4 is lower than or equal to -22°C and compressor running time is more than TIMING_DEFROST_TIME, if any one of the following conditions is satisfied, defrosting ends and the machine switches to normal heating mode:
  - Unit runs for 10 minutes consecutively in defrosting mode.
  - T3 rises above 10°C/50°F.
- If any one of the following conditions is satisfied, the unit enters defrost mode:
  - If T3 or T4 is lower than -3°C(27°F) for 30 seconds,Ts-T1 is lower than 5°C(10°F) and compressor runtime is more than 90 minutes.
  - If T3 or T4 is lower than -3°C(27°F) for 30 seconds and compressor running time is more than 120 minutes.

Evaporator Temperature Protection

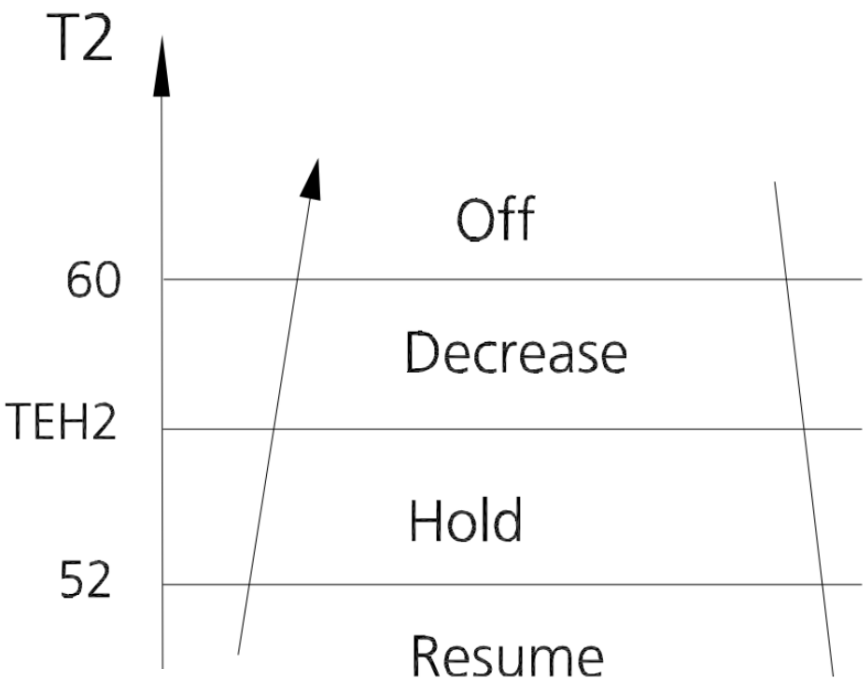

- Off: Compressor stops.
- Decrease: Lessen the running frequency to the lower level for 20 seconds.
- Hold: Keep the current frequency.
- Resume: No limitation for frequency.

Electric Heater Control:

1. When T1≤Tsc, and fan speed is higher than ucSpdHLLow-100 for 3 seconds,the heater is on and when fan speed is below ucSpdHLLow-200 for 3 seconds, the heater is off. The indoor fan speed is at 1% within 30 seconds. After 30 seconds, it changes to the setting speed.
2. When T1≥Tsc +HDIFTEMP2, the heater is off, and the fan motor keeps on working at setting speed. If the DAHT temperature checked is lower than the protection temperature, and the operation time of fan motor is more than 10 seconds, then the fan motor is off.

3. If the DAHT temperature checked is higher than the protection temperature, the heater is off and the fan motor keeps on working. Until the DAHT temperature checked is lower than the protection temperature, the heater is on.
4. If the DAHT temperature sensor is in open circuit or has short circuited, the heater is off and the fan motor is off 30 seconds later.
5. If the ambient temperature sensor is in open circuit or has short circuited, the heater is off and the fan motor is off 30 seconds later.

Auto Mode:

- In this mode, the fan speed cannot be adjusted and is automatically controlled based on the temperature setting and room temperature.
- In auto mode, the machine selects cooling, heating, or fan only mode, on the basis of ΔT (ΔT =T1-TS).

ΔT	Running Mode
ΔT>1°C(2°F)	Cooling
-1°C(-2°F)≤ΔT≤1°C(2°F)	Fan Only
ΔT<-1°C(-2°F)	Heating

- Select the operation mode according to the room temperature (T1) and set temperature (Ts), determine the current actual operation mode, and judge once every 15 minutes after the compressor stops.
- If the setting temperature changes, re-judge the running mode.
- There is no need to wait 15 minutes to judge the mode in auto fan mode.

4.4 DIP Switch Configurations

NOTE: Unit must be powered off to effectively change their status.

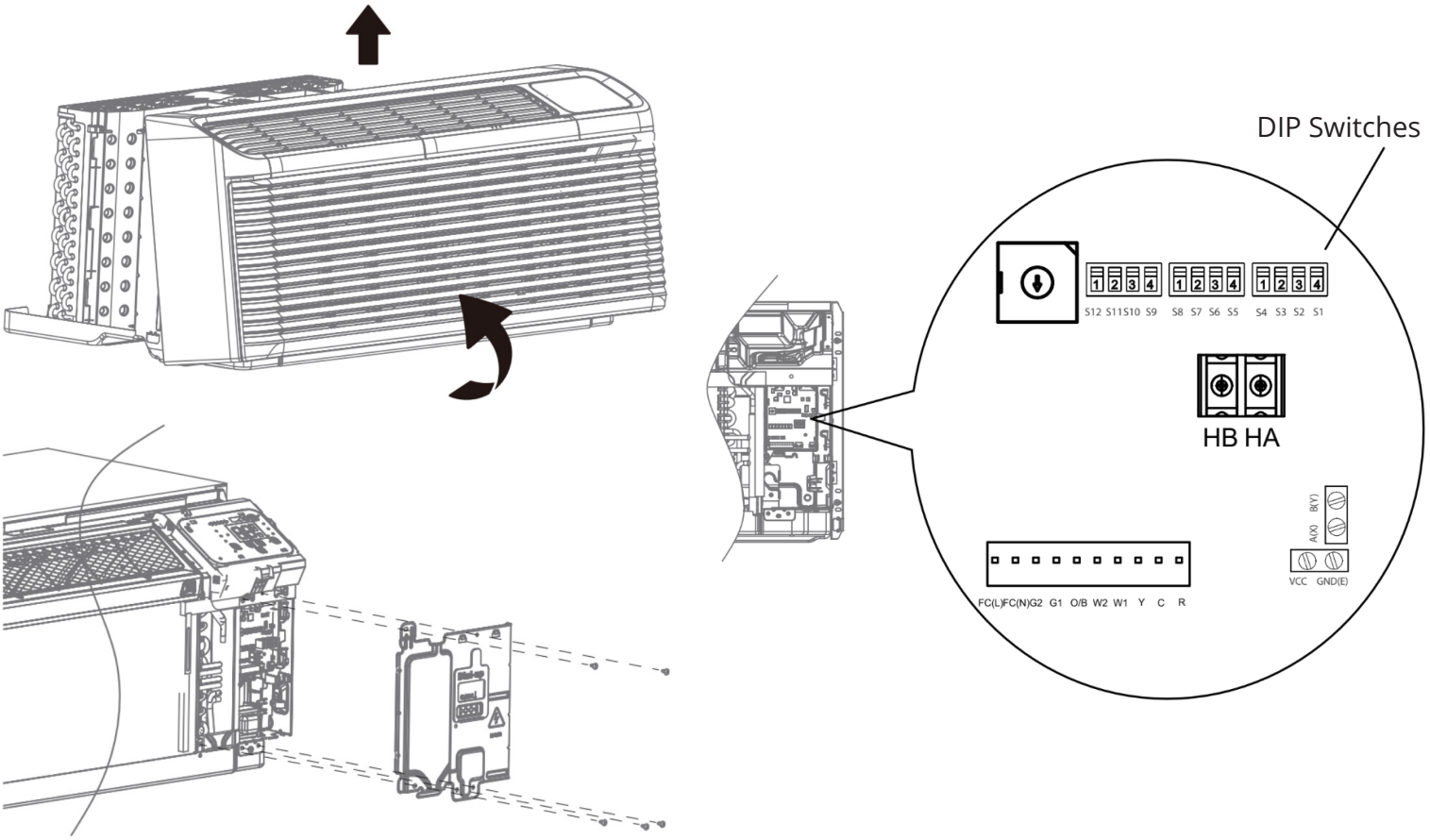

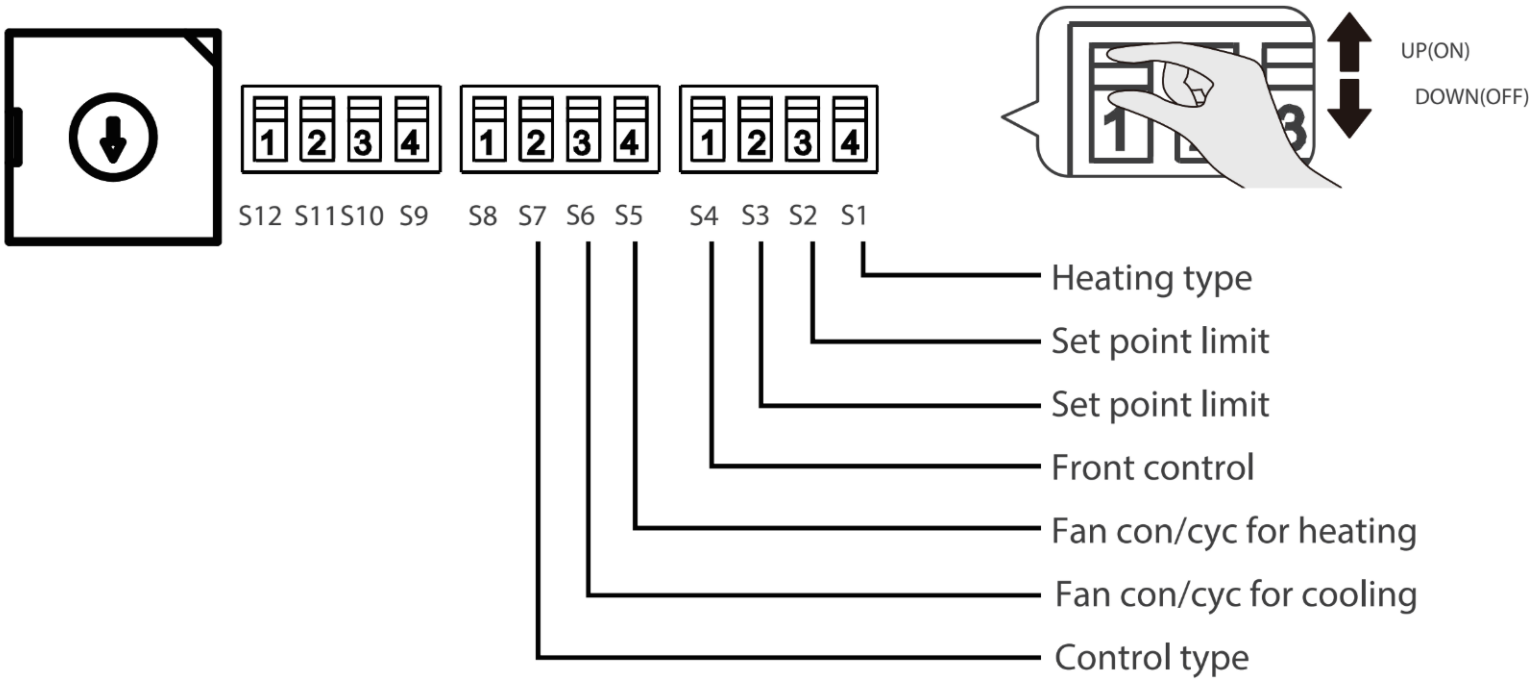

DIP Switch	Up (ON) - 1	Down (OFF) - 2
S1	Heating Mode with Only Electric Heating	Heating Mode with Both Electric Heating and Heat Pump Heating
S2 S3	Setting Temperature Range: S2=0, S3=0: 60°F-86°F; S2=0, S3=1: 63°F-80°F; S2=1, S3=0: 65°F-78°F; S2=1, S3=1: 68°F-75°F.	
S4	1 (Turn O Front Control) ON	0 (Turn On Front Control) OF
S5	In Heating Mode, When the Indoor Fan Continuous Operation is Enabled.	In Heating Mode, When the Indoor Fan Continuous Operation is Disabled.
S6	In Cooling Mode, When the Indoor Fan Continuous Operation is Enabled.	In Cooling Mode, When the Indoor Fan Continuous Operation is Disabled.
S7	Wall thermostat control.	The display panel and wall thermostat control simultaneously.

* Electric Heat Only (for heat pump unit only)
- This setting is typically used for Emergency Heating.

* Set-point Temperature Limits
- Provides a restricted range of temperature control.

* Heat and Cool Fan CON/CYC Dip-switches

Allows the fan to operate in continuous or cycle modes while the unit is in heating and cooling mode.

CON(Continuous)

Allows the fan to run continuously, circulating air even when the temperature setting has been satisfied. This switch helps to maintain the room temperature closer to the thermostat setting.

CYC(Cycle)

This setting allows the fan to cycle on and o with the compressor or electric heater. The fan stops a short time after the temperature setting is satisfied.

* Wall Thermostat Enable
- A wall thermostat can be connected to the unit. If the DIP switch is set to ON, when the air conditioner is controlled by the thermostat, it will only process inputs from the thermostat. Inputs from the panel, remote control, etc., will be invalid. If the DIP switch is set to OFF, the air conditioner can be controlled by the panel, remote control, and thermostat together. When the thermostat outputs a control signal to the air conditioner, the air conditioner will prioritize the input from the thermostat.

4.5 DIP Switch Configurations by Panel Control

CAUTION

The unit must be in stand-by status to effectively change the DIP switch configuration using the panel.

- Press the Up and Down buttons together for 3 seconds to activate the DIP switch configurations via panel control. (See Fig. 4-4.)
- See Table 4.2 for DIP switch configurations and functions via panel control.

Note: To exit the DIP switch configurations via panel control, provide no input for 30 seconds or press and hold the Up and Down buttons together for 3 seconds and the unit will save the previous settings.

- The LED will display Sx, Fx, (x could be 1,2,3 etc.) and other letters, such as ON, OF, HY, EH, ETC>, are used to indicate the current function serial number function switch status. (See Fig. 4-4.)
- Press the Up button to adjust the DIP switch serial number.
- Press the Down button to adjust the function switch corresponding to the previously-selected serial number.

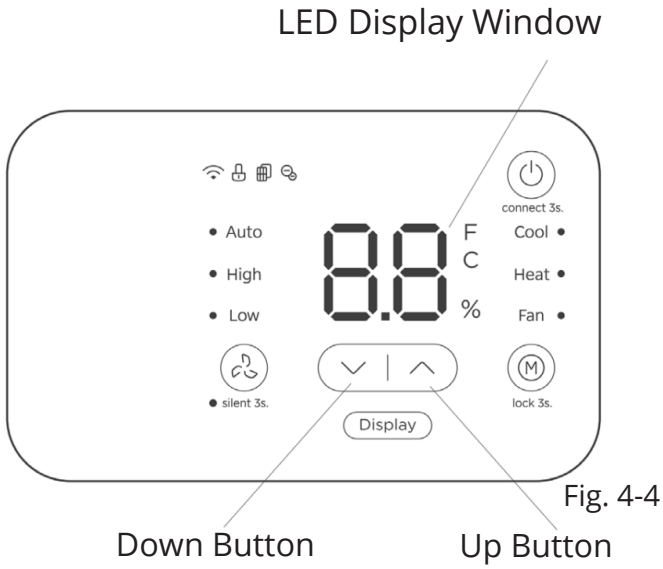

Fig. 4-4

Table 4.2 - DIP Switch Configurations

Aux. Display	DIP Switch	Up (ON)-1	Down (OFF)-0
SO	\	1 (Settings via panel are valid), LED displays AC	0 (Settings via DIP switch panel are valid, query only) LED displays DP
S1	S1	Heating mode with only electric heating. LED displays EH	Heating mode with both electric heating and heat pump heating. LED displays HY
S2 Display Lower Temperature Limit S3 Display Upper Temperature Limit	S2 S3	Setting Temperature Range: S2=OFF, S3=OFF: 60°F-86°F; S2=OFF, S3=ON: 63°F-80°F; S2=ON, S3=OFF: 65°F-78°F; S2=ON, S3=ON: 68°F-75°F.	
S4	S4	1 (Turn off front control) ON	0 (Turn off front control) OFF
S5	S5	In heating mode, when the indoor fan is On the continuous operation is enabled. LED displays ON	In heating mode, when the indoor fan is Off the continuous operation is disabled. LED displays OF
S6	S6	In cooling mode, when the indoor fan is On the continuous operation is enabled. LED displays ON	In cooling mode, when the indoor fan is Off the continuous operation is disabled. LED displays OF

Aux. Display	DIP Switch	Up (ON)-1	Down (OFF)-0
S7	S7	Wall thermostat control. LED displays "TH"	The display panel and wall thermostat are controlled simultaneously. LED displays "HY"
F1	\	Select the fresh air or ERV fan speed under air conditioning control. "Au" means Auto, "80" means High, "60" means Medium, "40" means Low, "OF" means OFF (optional).	
F2	\	Smart humidity control settings: 40-60, "Au" means automatic,"OF" means OFF. This needs to be activated when shutting down Cooling Mode.	
F3	\	Negative ions (optional): "ON" means that the function is ON, "OF" means the function is OFF.	
F4	\	Set low temperature protection point: 0-16° Celsius or to corresponding degree's in Fahrenheit, "OF" means OFF.	
F5	\	Set high temperature protection point: 30-37° Celsius or to corresponding degree's in Fahrenheit, "OF" means OFF.	

NOTE

- If S0 is selected as AC (the switch for the air conditioning panel control), refer to the previous section and adjust the DIP switch S4 to OFF. By doing this, the functional status displayed on the S4 channel of the air conditioning panel will take effect.
- After all is set, press the Up and Down buttons together for 3 seconds to exit the operation interface and cut off the power. When restarted, the settings are activated.
- When S0 is selected as DP, the functional status displayed for S0-S7 can only be viewed and cannot be adjusted using the down button.
- If no negative ions are present, skip F3. If a 24V wire controller control is selected, S5 and S6 will be skipped. If the dial plate is not connected, S4 will be skipped. If there is no fresh air module, F1 will be skipped.
- Negative ion function (optional): when the function is on, the ion generator is energized and will help to remove pollen and impurities from the air and trap them in the filter.
- Low temperature protection: when the indoor temperature abnormally decreases (below the set threshold), it automatically triggers a protection mechanism to prevent the equipment from operating under over-cooling or the ambient temperature from continuously being too low.
- High temperature protection: when the indoor temperature abnormally increases (above the set threshold), it automatically triggers a protection mechanism to prevent the equipment from overheating or the ambient temperature from continuously being too high.

4.6 Wall Thermostat Terminal

! CAUTION

Only trained, qualified personnel should access the electrical panel on the unit and install electrical accessories. Please contact a qualified technician for assistance.

Step 1: Thermostat Wire Routing

- Thermostat wire is field-supplied. The recommended wire size is 18-20 gauge solid thermostat wire.

NOTE

- It is advised that extra wires should be run to the unit in case any are damaged during installation. Thermostat wire should always be routed around or under but never through the wall sleeve. The wire should then be routed behind the front panel to the terminal connector. (See Fig. 4-5.)
- Refer to the thermostats installation instructions for details on installing the wall thermostat.

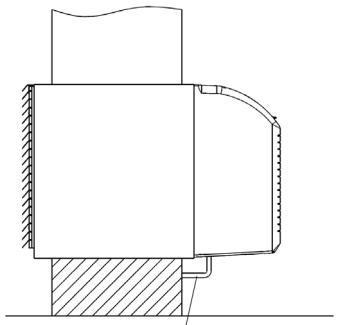

Thermostat Wire Routing
(Under Sleeve, Behind Front Panel)

Fig. 4-5: Proper Wire Routing Beneath the Unit

Step 2: Installation Instructions for Some Types of Wall Thermostats

- Remove the 4 screws and take the cover panel down. (See Fig. 4-6.)

CAUTION

- Do not discard the 5 screws as they will need to be reinserted after completion.
- If you need to route the wire out through the fireproof sheet-metal area, you may remove the rubber grommet, pierce it at the required spot, and then reinstall it. Do not discard the rubber grommet.

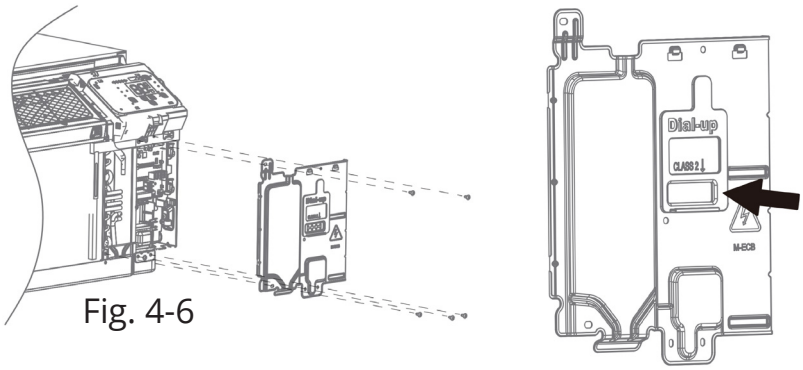

Fig. 4-6

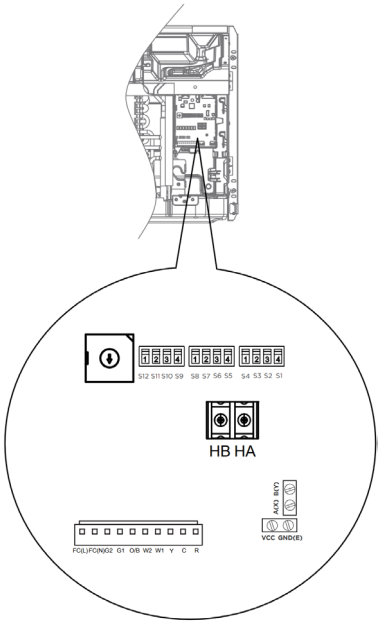

Fig. 4-7

1. Wall Thermostat (24VAC Optional)

Terminal of PTAC for alternate wall thermostat

Mode A (optional)

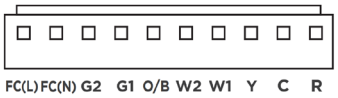

Mode B (optional)

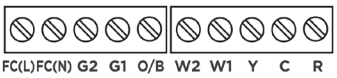

Terminal	Designation	Mode A Wire Color
FC (L)	Front desk control terminal L	Brown
FC (N)	Front desk control terminal N	Pink
G2	Low fan speed	Purple
G1	High fan speed	Green
O/B	4-2ay valve; Reverse cycle (energized in heat)	Blue
W2	Electrical heater 2	White
W1	Electrical heater 1	White
Y	Compressor	Yellow
C	24VAC terminal N (Neutral), Common	Black
R	24VAC terminal L	Red

2. Non-Polarity Wired Controller (Optional)

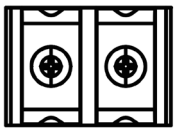

HB HA

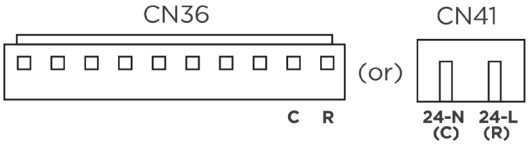

HA	Communication	Non-Polarity Wired Controller
HB		
R	24V AC	
C		

- The network address is configured via DIP switch F1 and the rotary switch. The corresponding address assignment is as follows:

S12	S11	Base Address
OFF	OFF	0
OFF	ON	16
ON	OFF	32
ON	ON	48

3. Wired Controller (12V) (Optional)

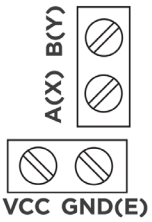

VCC	12V, RS485 Wired Controller
GND	
A	
B	

4. CCM (Optional)

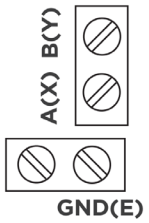

E	RS485 CCM
X	
Y	

- The network address is configured via DIP switch F1 and the rotary switch. The corresponding address assignment is as follows:

S12	S11	Base Address
OFF	OFF	0
OFF	ON	16
ON	OFF	32
ON	ON	48

! CAUTION

UNIT DAMAGE HAZARD

Failure to follow this caution may result in equipment damage or improper operation. Improper wiring may damage the unit's electronics. Common bussing is not permitted. Damage or erratic operation may result.

NOTE

- Use terminal 4-way for heat pump connection only.
- The wall thermostat must be a heating changeover 4-way valve.
- For thermostats that have only one fan speed output (on or auto), the fan speed is determined by how the terminal connector is wired. If a Low fan speed is desired, wire the G output from the thermostat to (G2) on the unit's terminal block. If a High fan speed is desired, wire the G output from the thermostat to (G1) on the units terminal block.
- The range of the set temperature of the wall thermostat must align with the range of the DIP switch setting.
- The wall thermostat must be set according to the proper unit type: heat pump or no heat pump.
- When O/B and W1; O/B and W2; or O/b and both W1 and W2 signals are present, the unit will automatically manage heating via the heat pump and electric heat. The unit has two electric heating input terminals, W1 and W2. If only one of W1 or W2 is energized, the unit will only turn on the high-stage electric heat (if equipped). If both W1 and W2 are energized simultaneously, the activation of electric heating is controlled by the unit itself.
- If the S7 is set to simultaneous control by the wall thermostat and the display panel, when the terminal signal input is correct, the LED will display LC.
- Please do not remove the control panel.

Front Desk Control

The controller can handle a switch signal from FC (L) and FC (N) inputs are called front desk control. Input must be 24VAC. If the system does not receive a 24VAC signal, it will turn off; otherwise, the unit runs in normal control. The DIP switch can control the Front Desk Control Feature. If the DIP switch is in the Down position, the unit will be turned off; otherwise, the unit runs in normal control.

5.1 Error Display

WARNING

- Be sure to turn off all power supplies or disconnect all wires to avoid electric shock.
- While checking indoor/outdoor PCB, please equip oneself with anti-static gloves or wrist strap to avoid damage to the board.
- Electricity remains in capacitors even when the power supply is off.
- Ensure the capacitors are fully discharged before troubleshooting.

The error codes are described in the following tables:

Display	Information
EH00	Display board EEPROM malfunction
EH03	The indoor fan speed is operating outside of the normal range
EC51	Main control board EEPROM malfunction
EC52	Condenser coil temperature sensor T3 is in open-circuit or has short-circuited
EC53	Outdoor ambient temperature sensor T4 is in open-circuit or has short-circuited
EC54	Compressor discharge temperature sensor TP is in open-circuit or has short-circuited
EH60	Indoor room temperature sensor T1 is in open-circuit or has short-circuited
EH61	Evaporator coil middle temperature sensor T2 is in open-circuit or has short-circuited
EC07	The outdoor fan speed is operating outside of the normal range
EH06	Main PCB/Display board communication error
EL0C	System lacks refrigerant
PC00	IPM malfunction or IGBT overstrong current protection
PC01	Overvoltage or over/low voltage protection
PC02	High temperature protection of IPM module
PC04	Inverter compressor drive error
P1	Bottom tray is full
PC0L	Low ambient temperature protection

For other errors: The display board may show a garbled code or a code undefined by the service manual. Ensure that this code is not a temperature reading.

Troubleshooting: Test the unit using the remote control. If the unit does not respond to the remote, the main PCB requires replacement. If the unit responds, the display board requires replacement.

88 Flash Frequency:

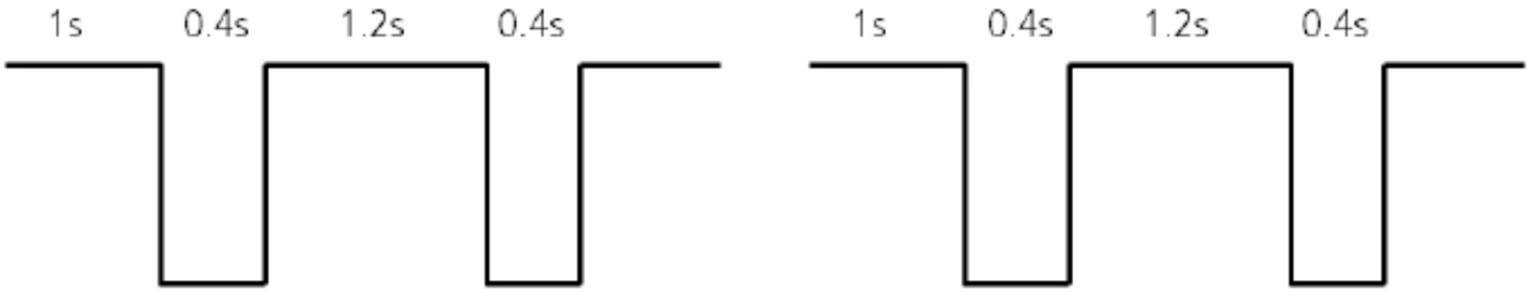

5.2 Information Inquiry

- In order to enter to the engineering mode, and check the data of the system (data checking mode), Please make the following steps:
- 1- Make sure that the AC is on the standby status, or working normally in a non-locked conditions.
- 2- Press “Power” + “Fan” buttons together for 5s until the remote controller screen shows “0”, and also “Auto, Cool, Heat, Battery “ icons will be displayed at the same time or press “MODE”+”UP”+”DOWN” for 5s on control panel.
- 3- Press “Up” or “Down” button to choose different channel number that you want to check (from 0-30) on the remote controller, and then the display will show the parameter value. If you use the control panel, you can query 239, 238 & 237 by pressing the down button on channel 0.

Please note:

1-The channel number indicates a certain parameter value (check the below table).

2-The indoor unit display will show the code for 2 seconds, and then the parameter value.

3-In the engineering mode, the other keys or operations are invalid except for the following buttons “Power”, “Up”, “Down”, and “Ok”.

4-In order to exit from the engineering mode, press “Power” + “Fan” buttons together for 2 seconds to quit checking and return to the home screen.

5-The engineering mode will be exited if there is no valid input data for 60 seconds.

Channel	Code	Query Content	Additional Notes
0	nA	Error Code	N/A
1	T1	Room Temperature	Display 3 digits twice (with decimal point) (°C/°F)
2	T2	Indoor Coil Temperature	Display 3 digits twice (with decimal point) (°C/°F)
3	T3	Outdoor Coil Temperature	Display 3 digits twice (with decimal point) (°C/°F)
4	T4	Ambient Temperature	Display 3 digits twice (with decimal point) (°C/°F)
5	TP	Discharge Temperature	Display 3 digits twice (°C/°F)
6	FT	Targeted Frequency	Display 3 digits twice (HZ)
7	Fr	Actual Frequency	Display 3 digits twice (HZ)
8	dL	Running Current	Display 3 digits twice (A)
9	Uo	Outdoor AC Voltage	The value is 0
10	Sn	Indoor Capacity Test	N/A
11	nA	Reserve	N/A
12	Pr	Outdoor Fan Speed	Display 3 digits twice
13	Lr	EXV Opening Steps	Display 3 digits twice
14	1r	Indoor Fan Speed	Display 3 digits twice
15	Hu	Humidity (if there is a sensor there)	N/A
16	TT	Set Temperature, Including Compensation	Display 3 digits twice
17	SH	Reserved	SH
18	1F	Wi-Fi Signal Strength	N/A
19	FL	Filter Time	Display 3 digits twice (hour)
20	oT	Target Frequency Calculated by Indoor	Display 3 digits twice

Channel	Code	Query Content	Additional Notes
21	nA	Reserved	N/A
22			
23			
24	HP	Total Power-On Running Time	Displays decimal with 3 times double 8
25	H0	Total Operation Time	Displays decimal with 3 times double 8
26	T5	T5 Temperature	Display 3 digits twice (with decimal point) (°C/°F)
27	nA	Reserved	N/A
28			
29			
30			

Error code of engineer mode:

Display	Error Information
EH00	Indoor EEPROM malfunction
EH03	The indoor fan speed is operating outside of the normal range
EC51	Outdoor unit EEPROM parameter error
EC52	Condenser coil temperature sensor T3 is in open circuit or has short circuited
EC53	Outdoor ambient temperature sensor T4 is in open circuit or has short circuited
EC54	Compressor discharge temperature sensor TP is in open circuit or has short circuited
EC55	Outdoor IPM module temperature sensor fault
EH60	Indoor room temperature sensor T1 is in open circuit or has short circuited
EH61	Evaporator coil temperature sensor T2 is in open circuit or has short circuited
EC07	The outdoor fan speed is operating outside of the normal range
EH06	Main PCB/Display board communication error
EL0C	System lacks refrigerant
FH0P	Wireless module self-test failure
PC00	IPM malfunction or IGBT over-strong current protection
PC10	Over low voltage protection
PC11	Over voltage protection
PC12	DC voltage protection
PC02	High temperature protection of IPM module
PC41	Current Input detection protection
PC42	Compressor start error
PC43	Lack of phase (3 phase) protection
PC44	No speed protection
PC45	341PWM error
PC46	Compressor speed malfunction
PC49	Compressor overcurrent protection
PC06	Compressor discharge temperature protection

Display	Error Information
PC08	Outdoor current protection
PH09	Anti-cold air in heating mode
PHA1	Lower water full protection
PC66	Outdoor water level protection
PC0F	PFC module malfunction
PC0L	Outdoor ambient temperature too low
PH90	Evaporator coil temperature over high protection
PH91	Evaporator coil temperature over low Protection
PC0A	Condenser coil temperature over high protection
LH00	Frequency limit caused by T2(L0)
FH0C	Humidity sensor is faulty
LC01	Frequency limit caused by T3(L1)
LC02	Frequency limit caused by TP(L2)
LC05	Frequency limit caused by voltage(L5)
LC03	Frequency limit caused by current(L3)
LC06	Frequency limit caused by PFC
LH07	Frequency limit caused by remote controller
nA	No malfunction or protection

5.3 Replacement Parts

If you do not have the time to test which specific parts are faulty, you can directly change the required parts according the error code. You can find the parts to replace by error code in the following table.

Parts Requiring Replacement	Error Code					
	EH00	EH03	EH60	EH61	EH0b	EL0C
Main PCB	X	✓	X	X	✓	X
Display Board	✓	X	✓	✓	✓	✓
Indoor Fan Motor	X	✓	X	X	X	X
T1 Sensor	X	X	✓	X	X	X
T2 Sensor	X	X	X	✓	X	✓
Filter/Strainer	X	X	X	X	X	X
Nozzle	X	X	X	X	X	X
Pump	X	X	X	X	X	X
Water Level Switch	X	X	X	X	X	X
Additional Refrigerant	X	X	X	X	X	✓

Parts Requiring Replacement	EC53	EC52	EC54	EC51	EC07	PC00	PC01	PC02	PC04
Main PCB	✓	✓	✓	✓	✓	✓	✓	✓	✓
Outdoor Fan Motor	X	X	X	X	✓	✓	X	✓	✓
T3 Sensor	X	✓	X	X	X	X	X	X	X
T4 Sensor	✓	X	X	X	X	X	X	X	X
TP Sensor	X	X	✓	X	X	X	X	X	X
Compressor	X	X	X	X	X	✓	X	X	✓
IPM Module Board	X	X	X	X	X	✓	✓	✓	✓
Additional Refrigerant	X	X	X	X	X	X	X	X	X

5.4 Troubleshooting by Error Code

EH00 (Display Board EEPROM Malfunction) Diagnosis and Solution

Description: Display PCB main chip does not receive feedback from EEPROM chip.

Recommended Parts to Prepare:

- Display PCB

Troubleshooting and Repair:

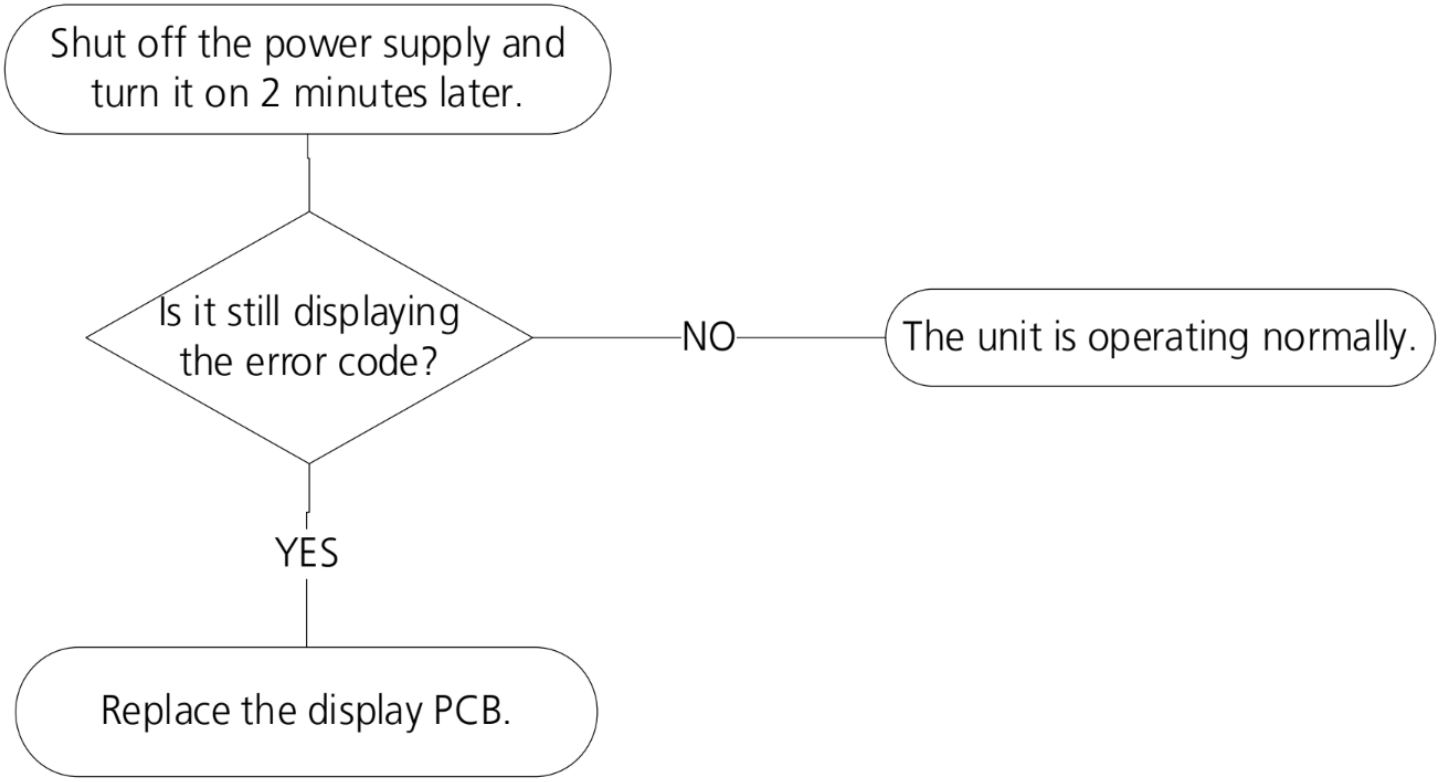

Remarks:

EEPROM: A read-only memory whose contents can be erased and reprogrammed using a pulsed voltage.

EC51 (Main Control Board EEPROM Malfunction) Diagnosis and Solution

Description: The main chip does not receive feedback from EEPROM chip.

Recommended Parts to Prepare:

- Main PCB

Troubleshooting and Repair:

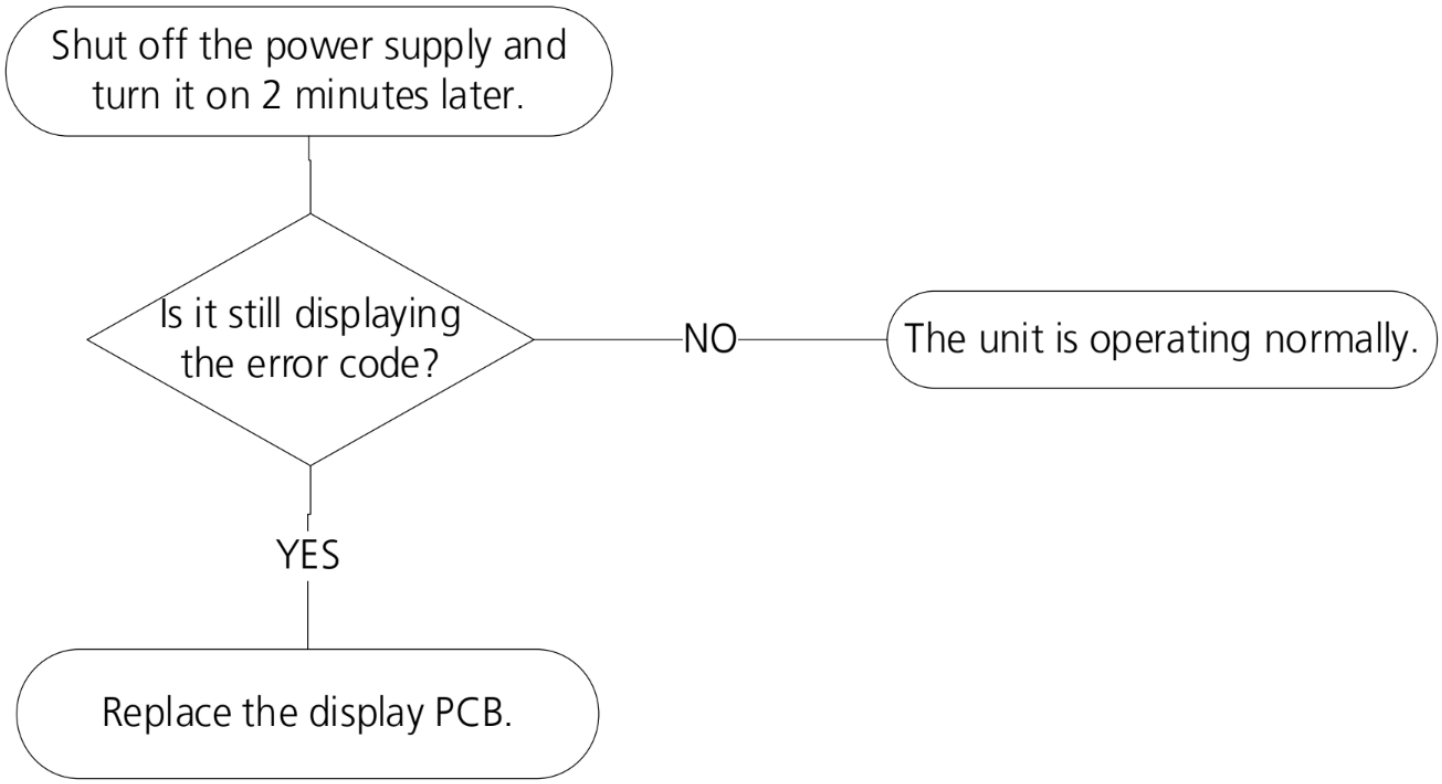

Remarks:

EEPROM: A read-only memory whose contents can be erased and reprogrammed using a pulsed voltage.

EH03/EC07 (The Indoor/Outdoor Fan Speed is Operating Outside of the Normal Range) Diagnosis and Solution

Description: When indoor fan speed keeps too low or too high for a certain time, the LED displays the failure code and the AC turns off.

When outdoor fan has over-current protection, phase lack protection, zero speed protection, IPM protection and so on, the LED displays the failure code and the AC turns off.

Recommended Parts to Prepare:

- Connection Wires
- Fan Assembly
- Fan Motor
- Main PCB

Troubleshooting and Repair:

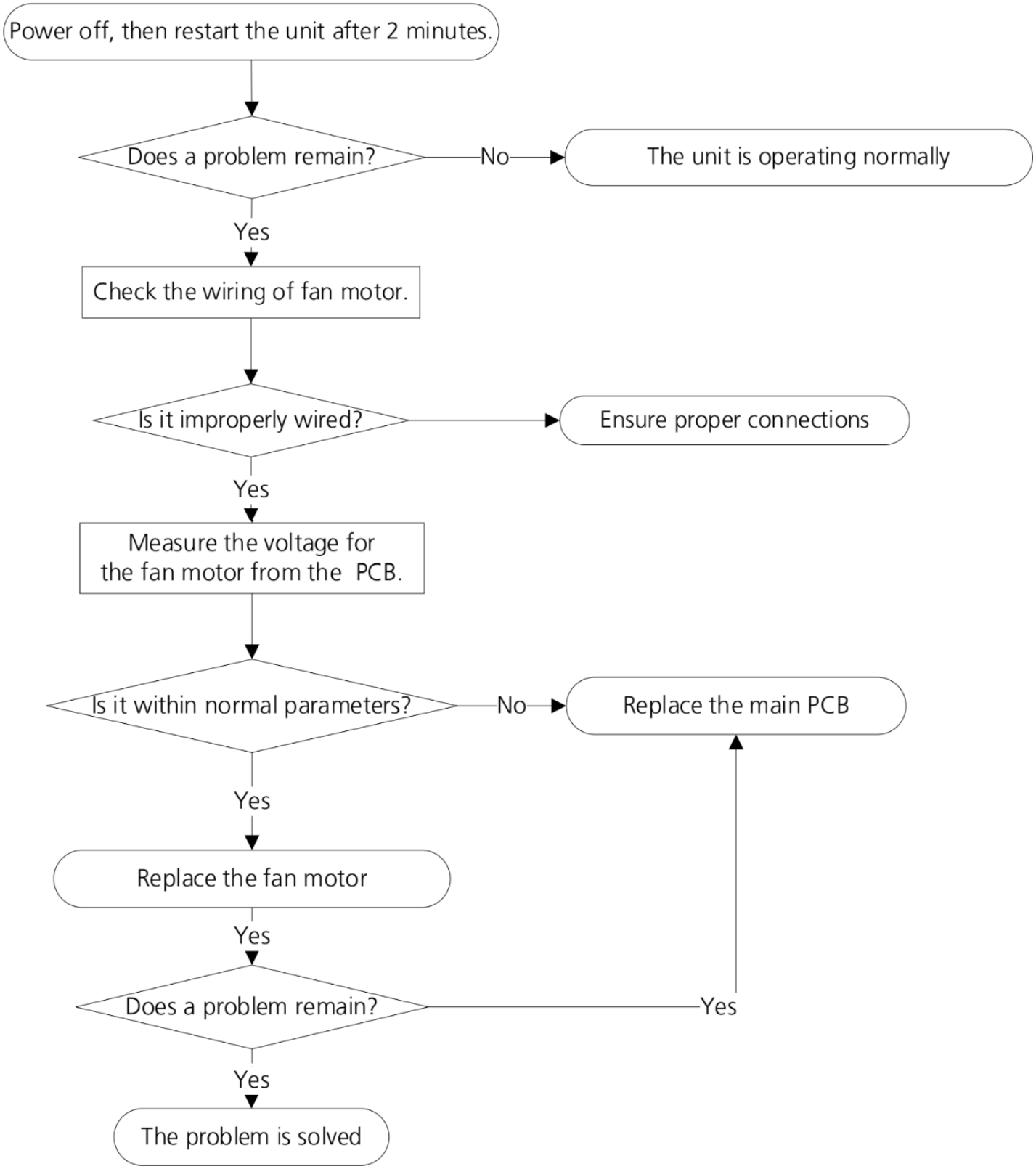
Power off, then restart the unit after 2 minutes.
Does a problem remain?
No
The unit is operating normally
Yes
Check the wiring of fan motor.
Is it improperly wired?
Ensure proper connections
Yes
Measure the voltage for the fan motor from the PCB.
Is it within normal parameters?
No
Replace the main PCB
Yes
Replace the fan motor
Yes
Does a problem remain?
Yes
Yes
The problem is solved

1. **Indoor DC Fan Motor (Control Chip is in the Fan Motor)**

Power on and when the unit is in standby, measure the voltage of pin1-pin3, pin4-pin3 in fan motor connector. If the value of the voltage is not in the range showing in below table, the PCB must has problems and need to be replaced.

- DC motor voltage input and output:

No.	Color	Signal	Voltage
1	Red	Vs/Vm	50-400V
2	---	---	---
3	Black	GND	0V
4	White	Vcc	13.5-16.5V
5	Yellow	Vsp	0~6.5V
6	Blue	FG	13.5-16.5V

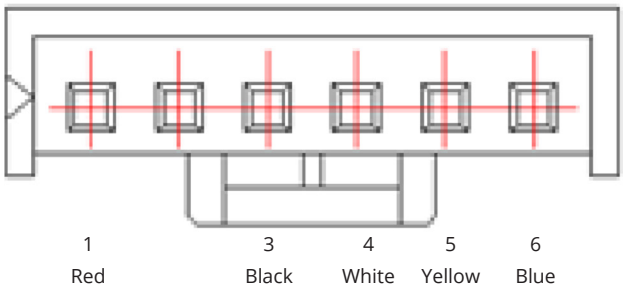

2. **Outdoor DC Fan Motor (control chip is in outdoor PCB)**

Release the UVW connector. Measure the resistance of U-V, U-W, V-W. If the resistance is not equal to each other, the fan motor must has problems and need to be replaced. Otherwise, the PCB must has problems and need to be replaced.

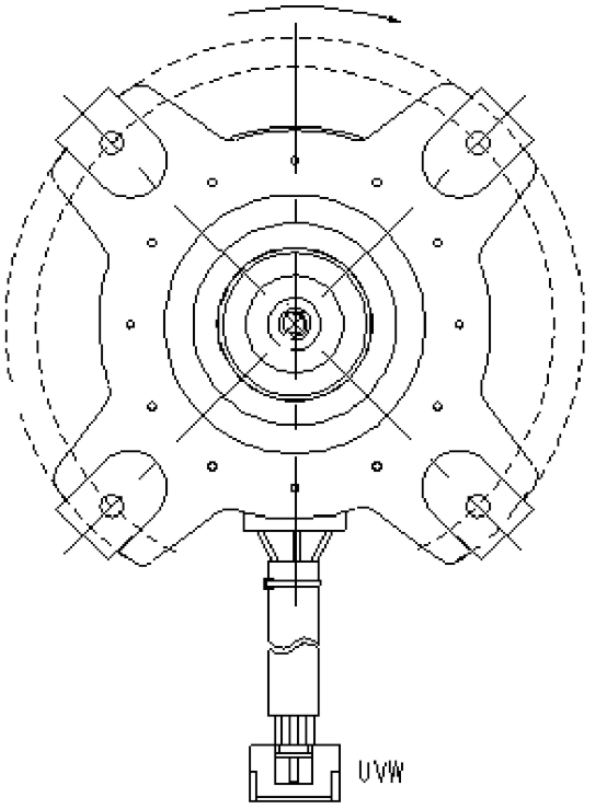

EH60/EH61(Open circuit or short circuit of indoor temperature sensor (T1, T2) Diagnosis and Solution

Description: If the sampling voltage is lower than 0.06V or higher than 4.94V, the LED displays the failure code.

Recommended Parts to Prepare:

- Connection Wires
- Sensors
- Display PCB

Troubleshooting and Repair:

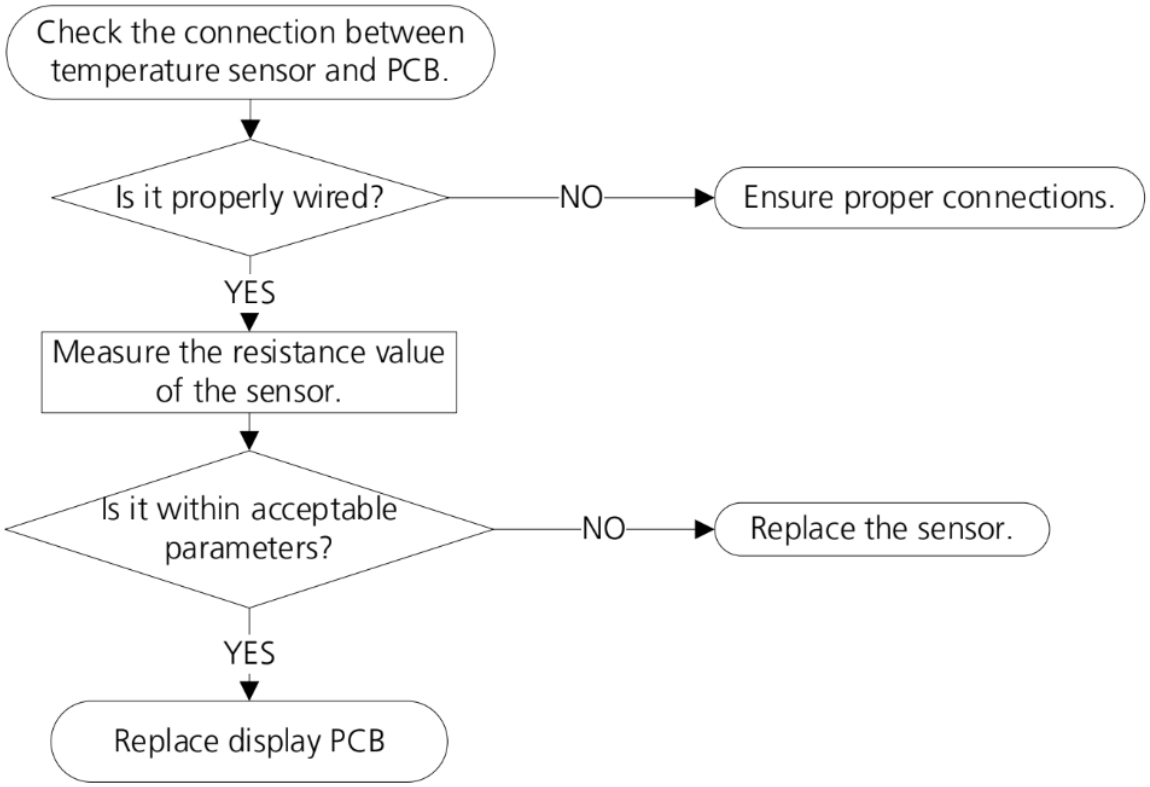

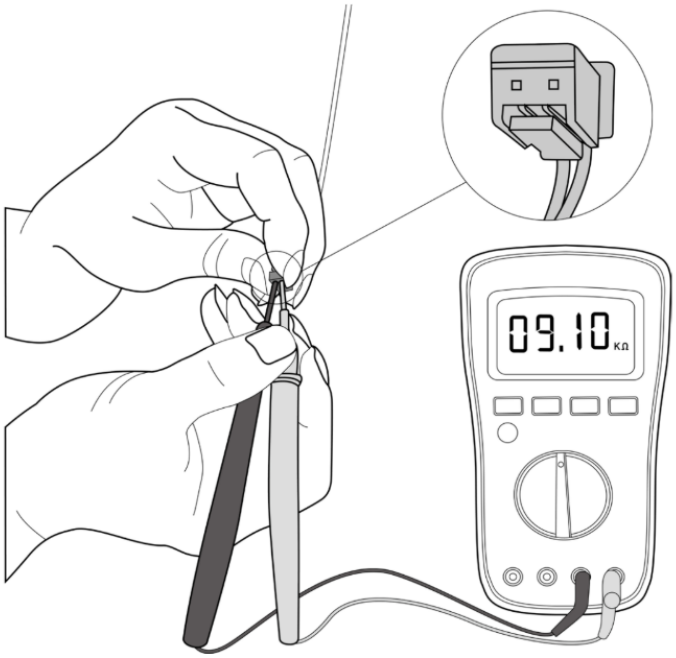

NOTE: This picture and the value are only for reference, actual appearance and value may vary.

EC52/EC53/EC54 (Open circuit or short circuit of outdoor temperature sensor (T3, T4,TP)) Diagnosis and Solution

Description: If the sampling voltage is lower than 0.06V or higher than 4.94V, the LED displays the failure code.

Recommended Parts to Prepare:

- Connection Wires
- Sensors
- Main PCB

Troubleshooting and Repair:

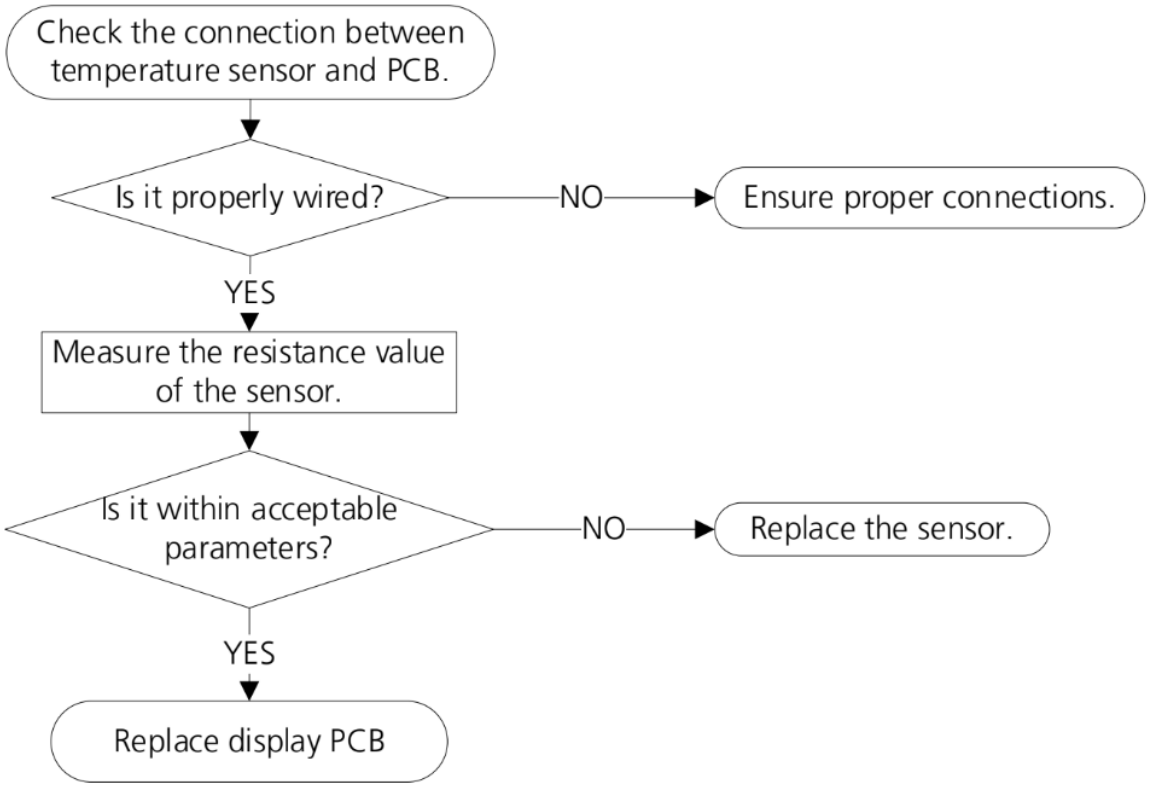

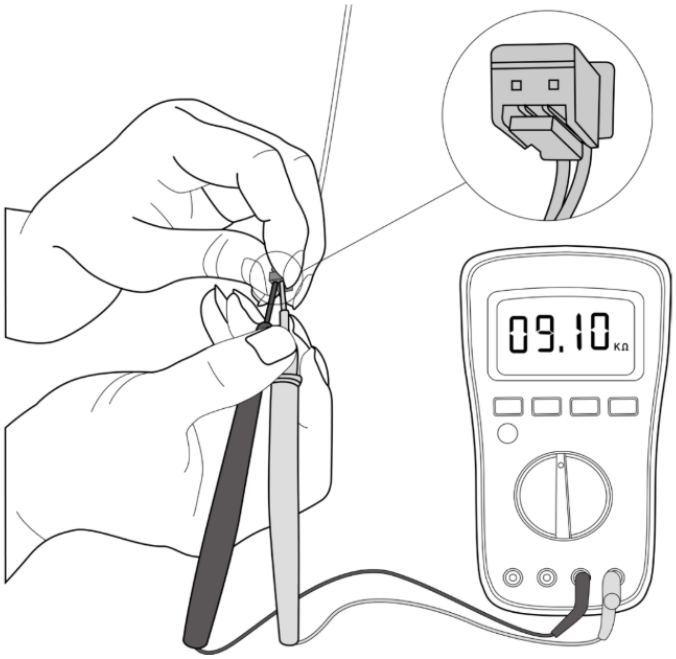

NOTE: This picture and the value are only for reference, actual appearance and value may vary.

EH0b (Main PCB/Display board communication error) Diagnosis and Solution

Description: The main board does not receive feedback from the display board.

Recommended Parts to Prepare:

- Communication Wire
- Main PCB
- Display Board

Troubleshooting and Repair:

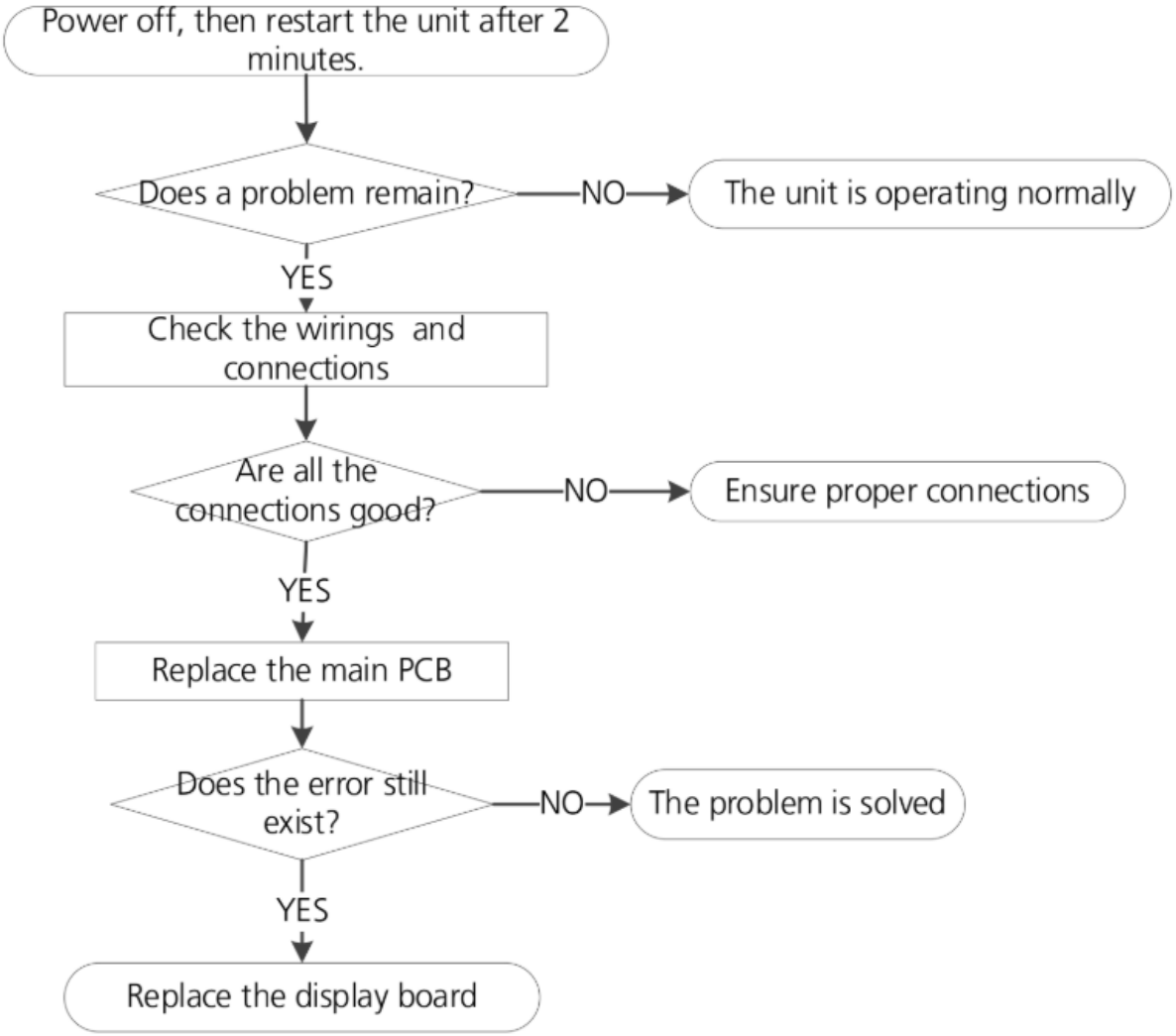

EL0C (System lacks refrigerant) Diagnosis and Solution

Description: Judging the abnormality of the refrigeration system according to the number of compressor stops and the changes in operating parameters caused by excessive exhaust temperature.

Recommended Parts to Prepare:

- Display PCB
- Additional Refrigerant

Troubleshooting and Repair:

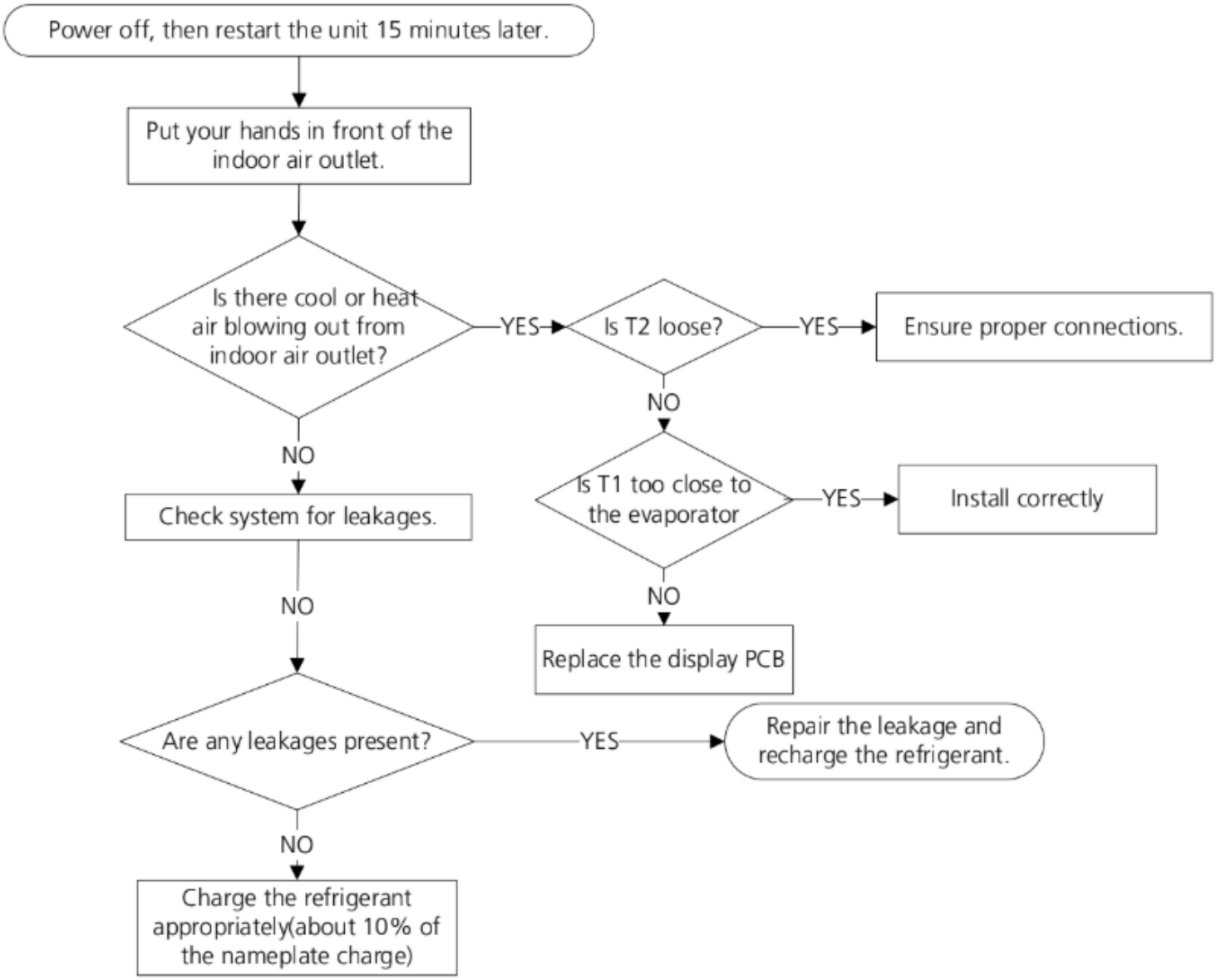

PC00 (IPM malfunction or IGBT over-strong current protection) Diagnosis and Solution

Description: When the voltage signal the IPM sends to the compressor drive chip is abnormal, , the LED displays the failure code and the AC turn off.

Recommended Parts to Prepare:

- Main PCB
- Compressor

Troubleshooting and Repair:

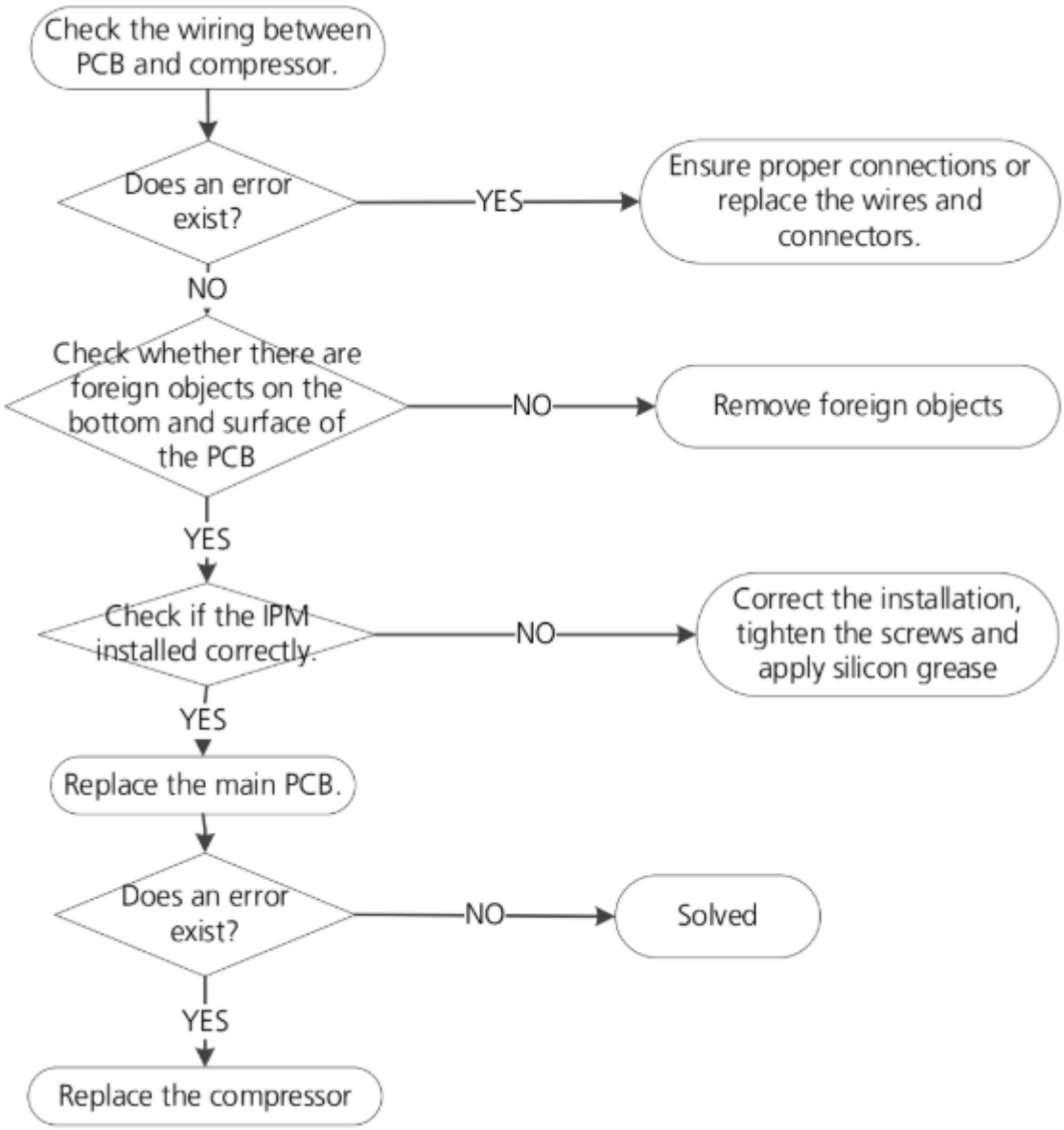

PC01 (Over voltage or too low voltage protection) Diagnosis and Solution

Description: Abnormal increases or decreases in voltage are detected by checking the specified voltage detection circuit.

Recommended Parts to Prepare:

- Power Supply Wires
- Main PCB

Troubleshooting and Repair:

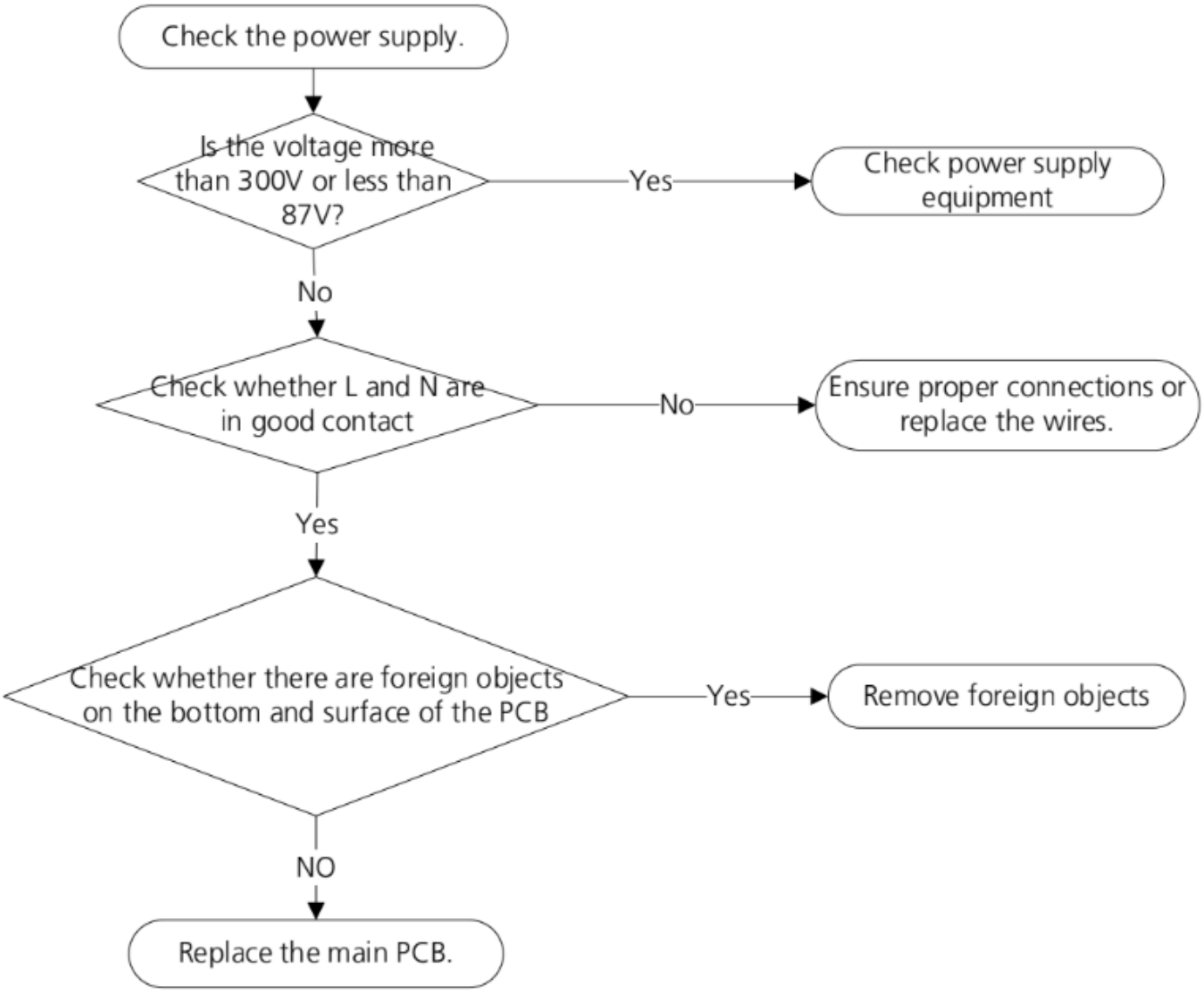

PC02 (High temperature protection of IPM module) Diagnosis and Solution

Description: If the temperature of IPM module is higher than a certain value, the LED displays the failure code.

Recommended Parts to Prepare:

- Main PCB

Troubleshooting and Repair:

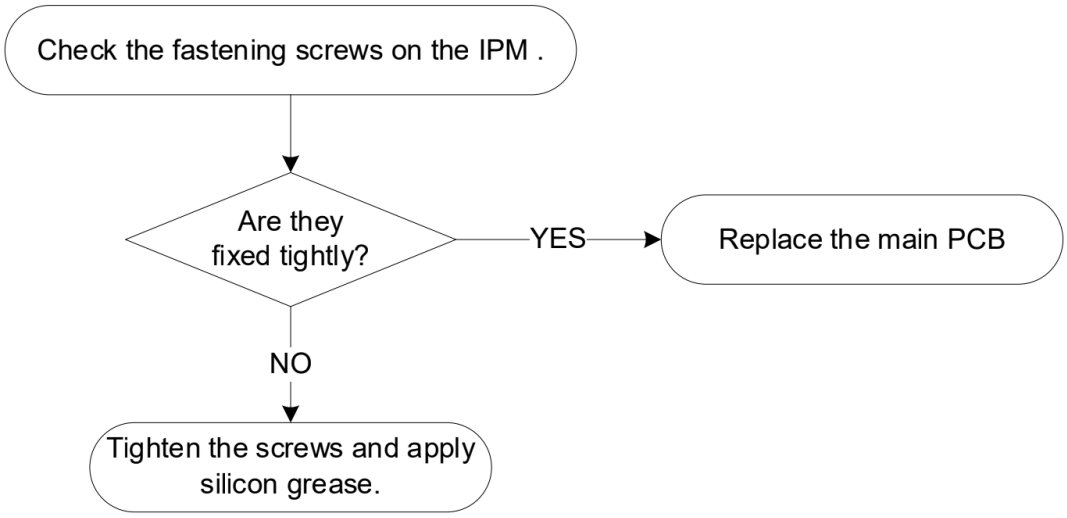

PC04 (Inverter compressor drive error) Diagnosis and Solution

Description: An abnormal inverter compressor drive is detected by a special detection circuit, including communication signal detection, voltage detection, compressor rotation speed signal detection and so on.

Recommended Parts to Prepare:

- Compressor
- Main PCB

Troubleshooting and Repair:

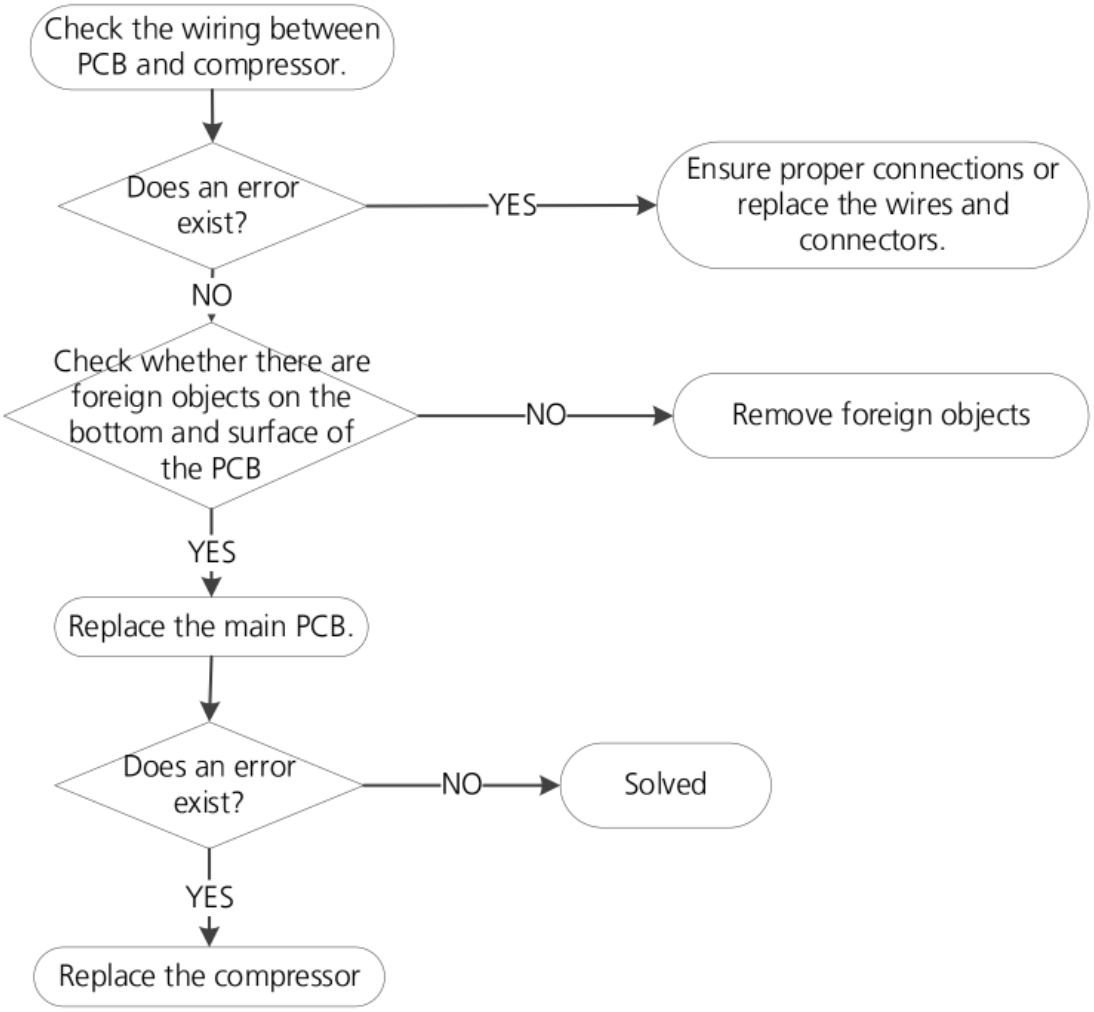

PC0L Low ambient temperature protection Error Diagnosis and Solution

Description: It is a protection function. When compressor is off, outdoor ambient temperature(T4) is lower than -35°C. for 10s, the AC will stop and display the failure code.

When compressor is on, outdoor ambient temperature(T4) is lower than -40°C.for 10s, the AC will stop and display the failure code.

When outdoor ambient temperature(T4) is no lower than -32°C. for 10s, the unit will exit protection.

P1 Bottom tray is full Error Diagnosis and Solution

Description: Water in tank is full.

Troubleshooting and repair:

Connect the drain hose and drain the collected water away. If protection repeats, call for service.

6.1 Temperature Sensor Check

WARNING

- Be sure to turn off all power supplies or disconnect all wires to avoid electric shock.
- Operate after compressor and coil have returned to normal temperature in case of injury.

1. Disconnect the temperature sensor from PCB.
2. Measure the resistance value of the sensor using a multi-meter.
3. Check corresponding temperature sensor resistance value table (Refer to Chapter Appendix).

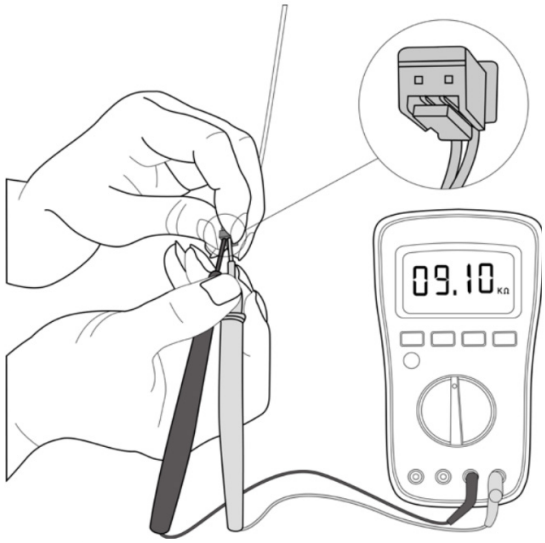

NOTE: This picture and the value are only for reference, actual appearance and value may vary.

6.2 Compressor Check

1. Disconnect the compressor power cord from outdoor PCB.
2. Measure the resistance value of each winding using a multi-meter.
3. Check the resistance value of each winding in the following table.

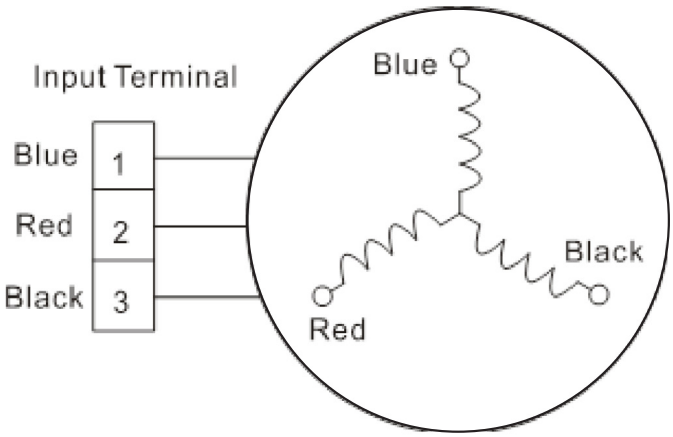

Resistance Value	KSN103D42UEZ31
Blue-Red	2.35±5%Ω
Blue-Black	
Red-Black	

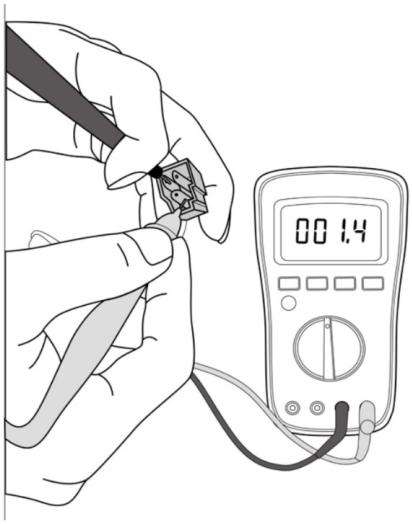

NOTE: This picture and the value are only for reference, actual appearance and value may vary.

6.3 Continuity Check

WARNING

- Electricity remains in capacitors even when the power supply is off.
- Ensure the capacitors are fully discharged before troubleshooting.

1. Turn off outdoor unit and disconnect power supply.
2. Discharge electrolytic capacitors and ensure all energy-storage unit has been discharged.
3. Disassemble outdoor PCB or disassemble IPM board.
4. Measure the resistance value between P and U(V, W, N); U(V, W) and N.

Digital Tester		Resistance Value	Digital Tester		Resistance Value
(+) Red	(-) Black	∞ (Several MΩ)	(+) Red	(-) Black	∞ (Several MΩ)
P	N		U	N	
	U		V		
	V		W		
	W		-		

Or test the conductivity of IPM with diode mode.

Needle-Type Tester		Normal Value	Needle-Type Tester		Normal Value
Red	Black		Red	Black	
P	U	Open-Circuit	N	U	0.3-0.5V
	V			V	
	W			W	

Needle-Type Tester		Normal Value	Needle-Type Tester		Normal Value
Black	Red		Black	Red	
P	U	0.3-0.5V	N	U	Open Circuit
	V			V	
	W			W	

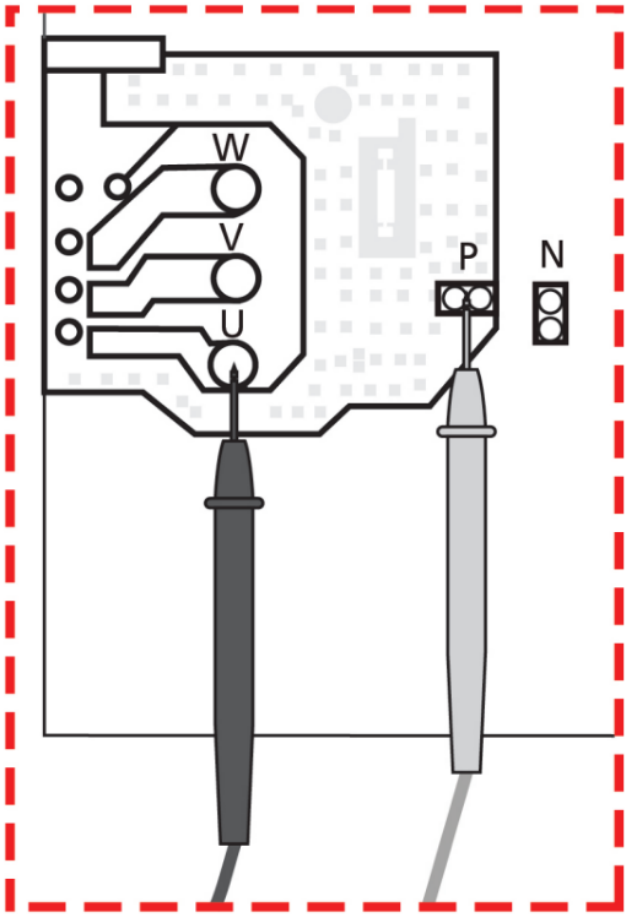

NOTE: This picture and the value are only for reference, actual appearance and value may vary.

6.4 Four-Way Valve Check

1. Power on, use a digital tester to measure the voltage, when the unit operates in cooling, it is 0V. When the unit operates in heating, it is about 230V AC.

If the value of the voltage is not in the range, the PCB must have problems and need to be replaced.



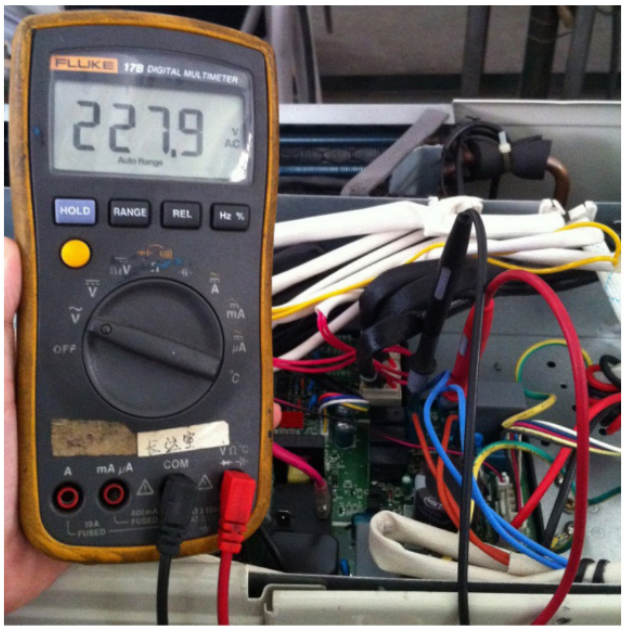

2. Turn off the power, use a digital tester to measure the resistance. The value should be 1.8~2.5 KΩ.

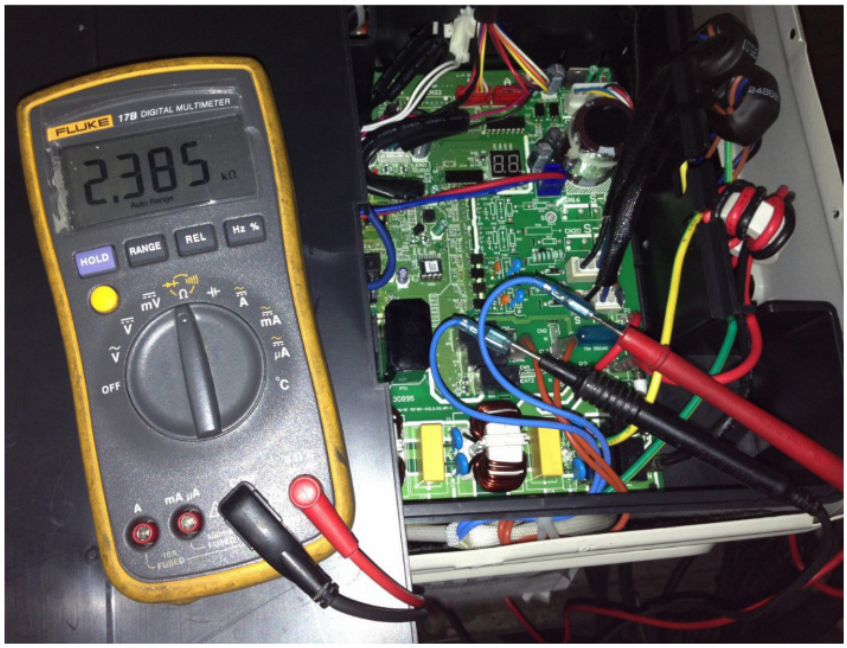

7 - Temperature Sensor Resistance Table

Temperature Sensor Resistance Value Table for T1,T2,T3 and T4 (°C – K)

°C	°F	K Ohm	°C	°F	K Ohm	°C	°F	K Ohm	°C	°F	K Ohm
-20	-4	115.266	20	68	12.6431	60	140	2.35774	100	212	0.62973
-19	-2	108.146	21	70	12.0561	61	142	2.27249	101	214	0.61148
-18	0	101.517	22	72	11.5	62	144	2.19073	102	216	0.59386
-17	1	96.3423	23	73	10.9731	63	145	2.11241	103	217	0.57683
-16	3	89.5865	24	75	10.4736	64	147	2.03732	104	219	0.56038
-15	5	84.219	25	77	10	65	149	1.96532	105	221	0.54448
-14	7	79.311	26	79	9.55074	66	151	1.89627	106	223	0.52912
-13	9	74.536	27	81	9.12445	67	153	1.83003	107	225	0.51426
-12	10	70.1698	28	82	8.71983	68	154	1.76647	108	226	0.49989
-11	12	66.0898	29	84	8.33566	69	156	1.70547	109	228	0.486
-10	14	62.2756	30	86	7.97078	70	158	1.64691	110	230	0.47256
-9	16	58.7079	31	88	7.62411	71	160	1.59068	111	232	0.45957
-8	18	56.3694	32	90	7.29464	72	162	1.53668	112	234	0.44699
-7	19	52.2438	33	91	6.98142	73	163	1.48481	113	235	0.43482
-6	21	49.3161	34	93	6.68355	74	165	1.43498	114	237	0.42304
-5	23	46.5725	35	95	6.40021	75	167	1.38703	115	239	0.41164
-4	25	44	36	97	6.13059	76	169	1.34105	116	241	0.4006
-3	27	41.5878	37	99	5.87359	77	171	1.29078	117	243	0.38991
-2	28	39.8239	38	100	5.62961	78	172	1.25423	118	244	0.37956
-1	30	37.1988	39	102	5.39689	79	174	1.2133	119	246	0.36954
0	32	35.2024	40	104	5.17519	80	176	1.17393	120	248	0.35982
1	34	33.3269	41	106	4.96392	81	178	1.13604	121	250	0.35042
2	36	31.5635	42	108	4.76253	82	180	1.09958	122	252	0.3413
3	37	29.9058	43	109	4.5705	83	181	1.06448	123	253	0.33246
4	39	28.3459	44	111	4.38736	84	183	1.03069	124	255	0.3239
5	41	26.8778	45	113	4.21263	85	185	0.99815	125	257	0.31559
6	43	25.4954	46	115	4.04589	86	187	0.96681	126	259	0.30754
7	45	24.1932	47	117	3.88673	87	189	0.93662	127	261	0.29974
8	46	22.5662	48	118	3.73476	88	190	0.90753	128	262	0.29216
9	48	21.8094	49	120	3.58962	89	192	0.8795	129	264	0.28482
10	50	20.7184	50	122	3.45097	90	194	0.85248	130	266	0.2777
11	52	19.6891	51	124	3.31847	91	196	0.82643	131	268	0.27078
12	54	18.7177	52	126	3.19183	92	198	0.80132	132	270	0.26408
13	55	17.8005	53	127	3.07075	93	199	0.77709	133	271	0.25757
14	57	16.9341	54	129	2.95896	94	201	0.75373	134	273	0.25125
15	59	16.1156	55	131	2.84421	95	203	0.73119	135	275	0.24512
16	61	15.3418	56	133	2.84421	96	205	0.70944	136	277	0.23916
17	63	14.6181	57	135	2.63682	97	207	0.68844	137	279	0.23338
18	64	13.918	58	136	2.53973	98	208	0.66818	138	280	0.22776
19	66	13.2631	59	138	2.44677	99	210	0.64862	139	282	0.22231

7 TEMPERATURE SENSOR RESISTANCE TABLE

Temperature Sensor Resistance Value Table for T5&T6(for some units) (°C--K)

°C	°F	K Ohm	°C	°F	K Ohm	°C	°F	K Ohm	°C	°F	K Ohm
-20	-4	542.7	20	68	68.66	60	140	13.59	100	212	3.702
-19	-2	511.9	21	70	65.62	61	142	13.11	101	214	3.595
-18	0	483	22	72	62.73	62	144	12.65	102	216	3.492
-17	1	455.9	23	73	59.98	63	145	12.21	103	217	3.392
-16	3	430.5	24	75	57.37	64	147	11.79	104	219	3.296
-15	5	406.7	25	77	54.89	65	149	11.38	105	221	3.203
-14	7	384.3	26	79	52.53	66	151	10.99	106	223	3.113
-13	9	363.3	27	81	50.28	67	153	10.61	107	225	3.025
-12	10	343.6	28	82	48.14	68	154	10.25	108	226	2.941
-11	12	325.1	29	84	46.11	69	156	9.902	109	228	2.86
-10	14	307.7	30	86	44.17	70	158	9.569	110	230	2.781
-9	16	291.3	31	88	42.33	71	160	9.248	111	232	2.704
-8	18	275.9	32	90	40.57	72	162	8.94	112	234	2.63
-7	19	261.4	33	91	38.89	73	163	8.643	113	235	2.559
-6	21	247.8	34	93	37.3	74	165	8.358	114	237	2.489
-5	23	234.9	35	95	35.78	75	167	8.084	115	239	2.422
-4	25	222.8	36	97	34.32	76	169	7.82	116	241	2.357
-3	27	211.4	37	99	32.94	77	171	7.566	117	243	2.294
-2	28	200.7	38	100	31.62	78	172	7.321	118	244	2.233
-1	30	190.5	39	102	30.36	79	174	7.086	119	246	2.174
0	32	180.9	40	104	29.15	80	176	6.859	120	248	2.117
1	34	171.9	41	106	28	81	178	6.641	121	250	2.061
2	36	163.3	42	108	26.9	82	180	6.43	122	252	2.007
3	37	155.2	43	109	25.86	83	181	6.228	123	253	1.955
4	39	147.6	44	111	24.85	84	183	6.033	124	255	1.905
5	41	140.4	45	113	23.89	85	185	5.844	125	257	1.856
6	43	133.5	46	115	22.89	86	187	5.663	126	259	1.808
7	45	127.1	47	117	22.1	87	189	5.488	127	261	1.762
8	46	121	48	118	21.26	88	190	5.32	128	262	1.717
9	48	115.2	49	120	20.46	89	192	5.157	129	264	1.674
10	50	109.8	50	122	19.69	90	194	5	130	266	1.632
11	52	104.6	51	124	18.96	91	196	4.849			
12	54	99.69	52	126	18.26	92	198	4.703			
13	55	95.05	53	127	17.58	93	199	4.562			
14	57	90.66	54	129	16.94	94	201	4.426			
15	59	86.49	55	131	16.32	95	203	4.294			
16	61	82.54	56	133	15.73	96	205	4.167			
17	63	78.79	57	135	15.16	97	207	4.045			
18	64	75.24	58	136	14.62	98	208	3.927			
19	66	71.86	59	138	14.09	99	210	3.812			

8 - System Pressure Table

Pressure-On Service Port
System Pressure Table, R-32

Pressure			Temperature		Pressure			Temperature	
Kpa	Bar	PSI	°C	°F	Kpa	Bar	PSI	°C	°F
100	1	14,5	-51.909	-61.436	1850	18.5	268.25	28.425	83.165
150	1.5	21.75	-43.635	-46.543	1900	19	275.5	29.447	85.005
200	2	29	-37.323	-35.181	1950	19.5	282.75	30.448	86.806
250	2.5	36.25	-32.15	-25.87	2000	20	290	31.431	88.576
300	3	43.5	-27.731	-17.916	2050	20.5	297.25	32.395	90.311
350	3.5	50.75	-23.85	-10.93	2100	21	304.5	33.341	92.014
400	4	58	-20.378	-4.680	2150	21.5	311.75	34.271	93.688
450	4.5	65.25	-17.225	0.995	2200	22	319	35.184	95.331
500	5	72.5	-14.331	6.204	2250	22.5	326.25	36.082	96.948
550	5.5	79.75	-11.65	11.03	2300	23	333.5	36.965	98.537
600	6	87	-9.15	15.529	2350	23.5	340.75	37.834	100.101
650	6.5	94.25	-6.805	19.752	2400	24	348	38.688	101.638
700	7	101.5	-4.593	23.734	2450	24.5	355.25	39.529	103.152
750	7.5	108.75	-2.498	27.505	2500	25	362.5	40.358	104.644
800	8	116	-0.506	31.089	2550	25.5	369.75	41.173	106.111
850	8.5	123.25	1.393	34.507	2600	26	377	41.977	107.559
900	9	130.5	3.209	37.777	2650	26.5	384.25	42.769	108.984
950	9.5	137.75	4.951	40.911	2700	27	391.5	43.55	110.39
1000	10	145	6.624	43.923	2750	27.5	398.75	44.32	111.776
1050	10.5	152.25	8.235	46.823	2800	28	406	45.079	113.142
1100	11	159.5	9.79	49.621	2850	28.5	413.25	45.828	114.490
1150	11.5	166.75	11.291	52.324	2900	29	420.5	46.567	115.821
1200	12	174	12.745	54.941	2950	29.5	427.75	47.296	117.133
1250	12.5	181.25	14.153	57.475	3000	30	435	48.015	118.427
1300	13	188.5	15.52	59.936	3050	30.5	442.25	48.726	119.707
1350	13.5	195.75	16.847	62.325	3100	31	449.5	49.428	120.970
1400	14	203	18.138	64.648	3150	31.5	456.75	50.121	122.218
1450	14.5	210.25	19.395	66.911	3200	32	464	50.806	123.451
1500	15	217.5	20.619	69.114	3250	32.5	471.25	51.482	124.668
1550	15.5	224.75	21.813	71.263	3300	33	478.5	52.15	125.87
1600	16	232	22.978	73.360	3350	33.5	485.75	52.811	127.060
1650	16.5	239.25	24.116	75.409	3400	34	493	53.464	128.235
1700	17	246.5	25.229	77.412	3450	34.5	500.25	54.11	129.398
1750	17.5	253.75	26.317	79.371	3500	35	507.5	54.748	130.546
1800	18	261	27.382	81.288					



MRCOOL®

COMFORT MADE SIMPLE

PTAC

The design and specifications of this product and/or manual are subject to change without prior notice.
Consult with the sales agency or manufacturer for details.